SYSTEM FOR COMPARISON OF TRAFFIC CONTROL AGENTS' PERFORMANCE

Richard Lipka and Pavel Herout
University of West Bohemia
Department of Computer Science and Engineering
Univerzitní 8, Plzeň, 306 14, Czech Republic
E-mail: lipka@kiv.zcu.cz , herout@kiv.zcu.cz

KEYWORDS
Road traffic control, agent comparison, optimization.

ABSTRACT

We present a method and software for comparison of different road traffic control systems based on using of software agents. In last years, the agent-based traffic control is often discussed. Many agents were designed, but there is no way how to compare them in the same situation. Our system is designed to allow placement of different traffic control agents in simulated traffic network. Afterwards, a simulation is run and performance of control agents is measured. The traffic conditions are the same for all tested agents; it is possible to use several different scenarios. Agents can be subsequently compared, because they had operated in the same conditions.

INTRODUCTION

Due to growth of road transportation, optimization of traffic control is explored by many institutions. Often it is too expensive or even impossible to build new or wider roads, so optimization of traffic control is the one of the most important ways to improve traffic situation in the cities. One of approaches to traffic control is using of software agents. In last years, many different control systems based on agents was proposed (some of them are described below, in overview of existing agents). However it is difficult to compare them against each other. Usually, it is possible to find comparison of control system with static control of the crossroads or comparison of different varieties of the system. But there is no simple way how to compare two systems described in different articles. Tests described in articles were performed on different simulators, used scenarios and traffic networks are also different. That is why we have decided to create system able to perform comparison of different agent-based traffic control systems in the same traffic network and with the same scenarios.

Approaches to traffic control

With development of automated traffic control, analytical methods to create time plans for traffic lights were developed. One isolated crossroad may be optimized (Guberinić et al. 2008), but optimization problem of control of the whole traffic network is too complex to be solved by methods of analytical mathematics. Instead of mathematical analysis, approaches of artificial intelligence are used. Proposed techniques include artificial neural networks, expert systems and different kinds of logical reasoning or evolution algorithms. One of the most discussed ways is based on software agents.

AGENTS IN TRAFFIC CONTROLL

Software agents

Concept of software agents has first appeared in seventies. Since then, lot of definitions were created. One of the most general was proposed by Stuart Russell and Peter Norvig (Russel and Norvig, 2002): agent is

> *Anything that can be viewed as perceiving its environment through sensors and acting upon that environment trough actuators.*
> (p. 32)

According to this, agent has to be able to observe its environment and it has to have ability to influence this.
Another, more specific description of agents can be found in (Wooldridge and Jennings, 1995). It describes agent as encapsulated computer system deployed in environment, which is capable of flexible and autonomous activities, in order to achieve a specific goal. Basic conditions implied by this definition are autonomy – the ability of agent to work without being control by other systems, reactivity – the ability to react to impulses from outer environment, sociability – the ability to collaborate with other agents in the environment and initiative – the ability to perform actions in order to achieve long-term goal. When agent fulfils these conditions, it may be called intelligent.
According to these definitions, software agents are natural way to model traffic controllers. At least two of these conditions are fulfilled by traffic lights controllers in dynamic traffic control. They have sensors to measure traffic on the controlled crossroad and they are able to interact with traffic by controlling traffic lights. Usually, they also work autonomously, without any central control. In more complex traffic control systems, controllers on crossroads are also able to communicate with each other, in order to share information about traffic in the whole controlled network. The ability to achieve long-term goals is not so usual in traffic control, most currently used traffic controllers are only reactive (able to react to current situation, without long-term planning).

Proceedings 23rd European Conference on Modelling and Simulation ©ECMS Javier Otamendi, Andrzej Bargiela, José Luis Montes, Luis Miguel Doncel Pedrera (Editors)
ISBN: 978-0-9553018-8-9 / ISBN: 978-0-9553018-9-6 (CD)

Position of an agent

Agents in proposed control systems can be placed on several positions in traffic network. Most common are agents positioned on crossroads. There are two main approaches – one crossroad can be controlled by one agent, or each traffic lane can be control by a different agent. In more complex traffic control systems, agents may also be used to control roads, using variable message signs (Katwijk and Koningsbrugenn, 2002).
In agent oriented systems, not only control agents are used. Agents may be also placed on roads, to measure traffic characteristics, which are required by agents on crossroad to achieve better result (Roozemond, 2001). Because agents on crossroads are searching only local optimum, it is also possible to group agents into hierarchical, usually tree-like structure (France and Ghorbani, 2003). Agents on the bottom of the structure are responsible for optimization of traffic on one crossroad and agents on higher position are trying to improve traffic control from global point of view. Example of such structure can be seen at Fig. 1 – four crossroads are controlled by agents, two of them are using road observation agents to gain information about situation in front of the crossroad and all of them are controlled by one managing agent in order to optimize global criteria.

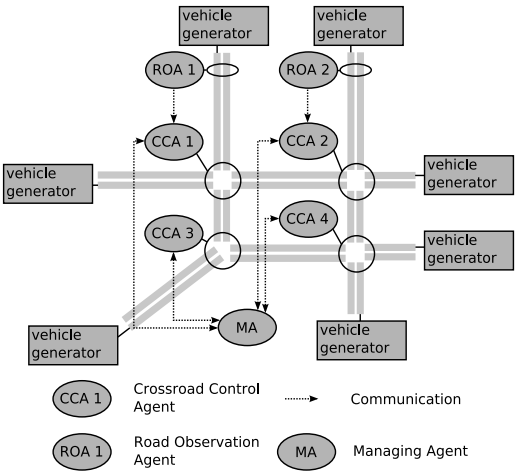

Figure 1: Positions of Agents

Structure of agent

Abilities of agents and tasks they will be able to solve are highly dependent on structure of agent, but some parts are common for all types of agents. Agent has to be able to observe surrounding environment, thus it has to have module able to obtain data from real hardware sensor. It also has to interact with its environment trough actuators. And inside agent has to be a program, capable of selecting action for actuators according to state of sensors (general scheme is on Fig. 2).

We can divide agents to two main groups – deliberative agents and reflex agents. This dividing is based on

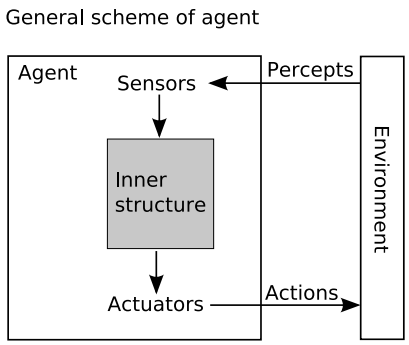

Figure 2: General Scheme of Agent

agent's ability to create inner model of surrounding environment.
Simple reflex agents are not equipped with internal model of environment. Instead of that, they are able only to observe current situation and react accordingly. This approach limits agent's ability to plan future activities. On the other hand, reflex agents are simpler, not so hardware-demanding. They are effective especially when they are operating in the groups (Brooks, 1991).
Deliberative agents are able to create internal model of the surrounding environment. Thus, they react not only to current state of the environment, but also to its past states. Due to this, they are able to make more complex plans, but they requires more complex internal structure, than reflex agents.
The most common model of a deliberative agent is called Belief-Desire-Intention (BDI). In this model, agent is composed from three main parts. Model of surrounding world (possibly including knowledge about other agents) and rules allowing predictions about changes of world after applying some actions are called belief. Using of term "belief" also shows, that agent's belief don't have to be true. Agent's goals, utility function or other mechanism used to choose the best action are called desire. And actions already chosen to be performed are called intentions. BDI model is wide spread and there is a lot of tools allowing implementation of own, BDI-based agents (such as Jadex).
It is important, that all type of agents are using sensors to gain information from the environment and has actuators to interact with the environment. Thus our comparison system has to have interfaces for both of them. On top of that, agents may need to interact with other agents or be grouped in a hierarchical structure, so communication interface also has to be part of comparison system.

Overview of existing agents

In this section, we want to briefly introduce four of newly proposed agent systems, to demonstrate their versatility.
Hirankitti and Krohkaew (2007) proposed reactive agent for control one crossroad. This agent is using information about traffic situation in front of crossroad

and also information about free capacity of roads behind crossroad. It is using set of rules to choose order and duration of signals. This agent may be used also to control isolated crossroads.

Danko Roozemond (2001) designed system based on three types of agents. Each crossroad is controlled by agent and crossroad control agents are grouped and managed by managing agent. If it is necessary, roads are observed by road segment agents and passing information to crossroad control agents (see Fig. 1, where similar system is shown). Crossroad control agents are able to learn and to control crossroad they are using not only information about current state, but also their knowledge of its history. Managing agent is giving suggestion to crossroad control agents, in order to search for global optimum.

Mizuno, Fukui and Nishihara (2008) created system of collaborating agents, controlling crossroads. Their agents are sharing information about movement of vehicles, in order to dissolve congestion. Using information about distance between crossroads and about number of vehicles waiting at adjacent crossroads, agent predicts number of vehicles, which will arrive in near future. They are effective only if they are used in the whole traffic network, they cannot be used to control isolated crossroad.

France and Ghorbani (2003) proposed to use hierarchical structure, with crossroad control agents and managing agents, responsible for the whole areas. If there is a lot of managing agents in the network, they also may be grouped and controlled by managing agent of higher level. Crossroad control agents are creating control strategies for crossroads (with regards only to local criteria) and send them to managing agents. Managing agents are creating their own strategies, with regard to global criteria and confronting them with strategies from crossroad control agents. If there is a huge difference, they create new strategy to reduce this difference and send it to the crossroad control agent. Both crossroad control and managing agents are using rule-based expert system in order to optimize control strategy.

COMPARISION SYSTEM

Comparing different agents is a difficult problem. Usually, each agent is described with some tests of its performance. Due to this, there is no simple way how to compare two agents from different articles. To make convincing comparison, three main conditions need to be fulfilled.

- Compared agent systems have to operate in the same traffic network. Some agents are tested only in very simple conditions, such as two or more crossroads on one road. In real world we need to deploy them in more complex environment.
- Traffic situation used for comparison has to be the same for all compared agent systems. It is also necessary to compare both agent systems in wide spectrum of different traffic conditions. For example agent in (Hirankitti and Krohkaew, 2007) is effective in non-crowded road, but in crowded road, its effectiveness is decreased. Traffic condition should change several times during test, to test agent's ability to adapt.
- The same simulation engine should be used, to prevent ambiguity from possible mistakes caused by simulator. For example in some types of car-following simulators car can freely pass through vehicles in transverse lanes in crossroad, while in simulators based on cellular automatons this behavior is not possible.

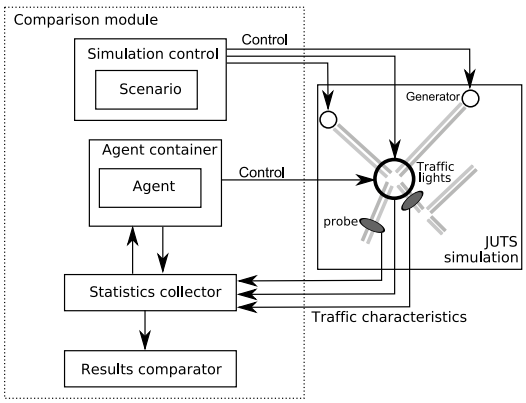

Figure 3: Schema of Comparison Module

We speak about comparison of traffic control agents, but the same system may be used to compare any kind of traffic control, which is able to use our interface. It is not important, if traffic control algorithms are fulfilling any of conditions given in introduction part they only have to be able to collaborate with described interface.

Simulator

We are using JUTS (Java Urban Traffic Simulator, Hartman, 2003) to test agents' performance. JUTS is using discrete, time-stepped simulation. Each step is equivalent of one second in real world. Model of roads is based on cellular automaton. Simulation is composed from roads, divided to lanes. Lanes are modelled as arrays of cells, which can be free or occupied, depending on presence of vehicle or obstacle Roads are connected by crossroads. Vehicles are moving trough network in steps.

Vehicles in JUTS are not equipped with the ability to find their path through traffic network. Instead of that, two methods of vehicle routing may be used. The first one is using prepared paths for vehicles, the second one is based on using pseudorandom numbers to determine turning of vehicles on crossroads. If the first method is used, vehicles are following prepared routes. Typical example may be travel of vehicle from residential area to centre of the city in the morning and return in the evening. Data for preparation of such routes may be obtained from sociological surveys; it is difficult to obtain them automatically. Method of pseudorandom numbers is based on statistics collected on each crossroad. For each lane leading to crossroad, vector of turning probabilities for other lanes is created. Each

member of vector represents probability, that vehicle will turn to the corresponding lane. These data may be obtained from automatic sensors placed in lanes on each crossroad in the network.
In JUTS, prepared routes are used mainly for simulation of public transportation, but it is also possible to use them for any other vehicles, if necessary. Method based on pseudorandom numbers generators is used by most of vehicles

Agent support

To connect agents with simulation, two types of agent container are implemented in the JUTS. First and more important is a container for crossroad control agent. It provides access to all traffic lights in the crossroad and to information about lanes leading from and to crossroad. Agent may use this container to obtain information about traffic situation in upstream lane. Because some agents needs also information about downstream, container is able to explore possible paths in crossroad and find all downstream lanes belonging to one upstream lane/traffic line. Second type of container is designed only to control one traffic lane; the whole crossroad would be then controlled by several collaborating agents. Lane container allows access to traffic lights of appropriate lane and to information about upstream and all downstream lanes. In current implementation, we allow using only one type of container – agents may control whole crossroads or lanes, but combination is not possible.
Containers also provide methods to search other agents in the simulation. In JUTS all objects are marked by ID numbers. Because agents are controlling specific objects, they are using their ID's. Thus, agent may be found by ID of controlled crossroad or lane. If this ID is not known, container is able to find ID's of neighbour agents, if they exists.
Implementation of two more containers is now being prepared. These will be a road container and group container. In some multiagent control systems, road agents are proposed to observe situation on the road and inform crossroad controlling agents about it (this is used in (Katwijk and Koningsbrugenn, 2002) or (Mizu et al. 2008)). Originally, we intended to emulate this only by measurements in appropriate lanes, carried out from crossroads. But for two reasons, we decided to use agent container instead. At first, road agents may be also designed to work with variable speed limit signs, according to their own plans or to request from crossroad agent. And the second reason is possible using of distributed computation. Using of agent container will allows us to use existing methods for communication, if measured road and crossroad will be distributed to different nodes.
Group container will be used for managing agents, if they are necessary. In some multiagent traffic control systems (for example in (Roozemond, 2001) or (France and Ghorbani, 2003) hierarchy of managing agents is used. Container will allow creating and managing group of crossroad agents or other managing agents, if more complex structure is used. It will provide methods to send messages to subordinate agents or to broadcast to whole group. This broadcasting has to be invoked by an agent in the group container – if one of subordinate agents needs to broadcast to the whole group, it is allowed only to send message to managing agent and it can decide if this message will be broadcasted or not.

Communication

Both containers provide also support for communication among agents. The crossroad container is able to send message to any specific crossroad, to multicast message to all neighbour crossroads or to broadcast message to all crossroads in simulation. The lane container can send message to another specific lane container, multicast to all lane containers in one crossroad or broadcast to all lane containers in simulation. Because distributed version of JUTS is developed, it is important to communicate only trough prepared methods, otherwise agent will not be able work correctly in distributed simulation. Messages are marked by its senders and they may have assigned priority. They are stored in priority queues in the container until they are read by agent (they cannot be lost or overwrite by newer message).

Measurements

All the measurements are provided by a statistics collector. Collector has full access to all objects in simulation map and it is able to obtain all kinds of information available in simulation. Lanes and crossroads in JUTS are creating their own statistics, such as long-term average vehicle speed or flow and they can be made accessible to agent containers trough statistics collector. The statistic collector is also able to detect queues and measure its lengths or collect statistics as an actual average speed of traffic density. Samples may be taken regularly, according to prepared plan – this is useful to evaluate agents' performance at the end of simulation. Collector is also able to take sample on request from agent container.
Statistics collector can also access to information from vehicles, not only from traffic network. It can measure average time they spent in simulation, by waiting in queues or how long they are waiting in the last queue. These data cannot be easily obtained in real world, but they are used in some proposed control agents (Balan and Luke, 2006), (Hoar et al. 2002).

Simulation control

Simulation control is used to automatically run prepared scenarios with different agents. Because amenities of dynamic traffic control are apparent mainly when traffic flow is not static, it is necessary to change settings of vehicle generators or probability of switching on crossroads. These changes are described in scenarios. Each scenario contains its length (in time steps, which corresponds to seconds), changes of pseudorandom number generators settings (which are used in vehicle

generators and at crossroads) and time when change should apply. Settings of crossroad switching probabilities may be used even to simulate an accident, to test if agent is able to deal with sudden vast changes. Vehicles in JUTS are not able to search way in traffic network, so operator has to prepare the whole accident scenario, including paths used by vehicles to avoid accident. Simulation control ensures that changes will be applied after given amount of time. It is also possible to set seed of pseudorandom generators, thus achieve an identical scenario.
This module can be configured to execute several runs with different scenarios and agents and to summarize results of each run to xml files.

Comparison of agents

To compare agents' performance, results' comparator is using data obtained from the statistics collector. Compared values and places of their measurement have to be set before the simulation is started. There are three types of criteria used to evaluate traffic control of crossroad in (Guberinić et al. 2008) – criteria based on capacity, criteria based on queues and environmental criteria. Because our simulator is not designed to observe fuel consumption or CO, CO_2 and other pollutants dispersion, we focus only on first two. Capacity criteria are observing amount of vehicles passing through crossroad. There is a detail description in (Guberinić et al. 2008) how to compute maximal capacity of crossroad, which can be compared to achieved amount of vehicles. Queuing criteria are observing delay of vehicles in crossroad, caused by red signal or by insufficient capacity of crossroad.
Criteria for global evaluation may be based on average values obtained from each crossroad, but it is possible to use other information. The aggregate waiting time of vehicle on all crossroads can be measured. If vehicles are using static paths, it is possible to embrace average time spent by travelling, if random numbers generators are used, the same role is fulfilled by average time spent by vehicle in simulation. It is also possible to focus on situation on roads, not only crossroads. Average speed or traffic density may be used.
It is important to know, that not only selection of criterion, but also selection of places where it will be measured is important. For example on junction of two main roads, the agent may try to treat them both as equal or to prefer one of them – which of course leads to deterioration of measured criteria in the other road.

EXPERIMENTS

In this part we show method of experiment used to compare performance of two traffic control systems. Each simulation experiment consists of four main parts – model of tested network, scenario, set of agents and their settings, and chosen criteria used to compare their performance. Selection of criteria is very important, because there is no general way how to tell if traffic control is optimal or not. For example agents (or traffic control systems) minimizing length of queues may not be optimal if average speed is observed. It is possible to observe more than one criterion, but then operator has to decide which of them is more important.
The traffic network model contains a full description of roads and crossroads. It cannot be changed during experiment. Even accidents and blocking of traffic lanes has to be done in scenarios. This is because vehicles in JUTS are not able to find their own way trough simulation map, so if the map is changed, prepared paths or turning probabilities has also to be changed. Because in our simulation only vehicles play active role, the model may be complex, number of roads and crossroads has only little influence on speed of computation.
Scenario contains description of vehicles in the simulation. Two most important parts are description of vehicle generators at the edge of simulated network and random numbers generators on crossroads, responsible for turning of vehicles. Contrary to traffic network, these values are changed during experiment, in order to determine ability of agent to adapt to new conditions. Data for scenario can be based on values measured in real world, or they may be prepared by operator. In this case, it is important to try scenario before experiment is performed, to check if it is suitable and it represents required situation (for example, wrong setting of vehicle generators may lead to rapid congestion of traffic network, wrong setting of crossroads may caused accumulation of vehicles in some parts of network). To test all abilities of control agent, several experiments has to be performed, with different scenarios. Agent capable for example of optimal control of uncrowded road may have problems with solving heavy congestions. Because plays an active role in the simulation in JUTS, scenario has the biggest influence on the speed of computation. With higher number of vehicles, simulation is getting slower.
Description of agents contains not only algorithm of each agent, but also their position and settings. Even if only one type of agent is used, agents from different crossroads must not be confused. Each agent has its own unique settings, which has to be prepared for crossroad controlled by it. Some types of agents are able to change these settings due to their learning mechanism, but in many cases at least some of setting is static and cannot be changed by agent itself. It may be only set of parameters, as preference of one direction or minimal and maximal duration of green signals, but some agents also requires preparation of signal phases or initial estimates of traffic density in all controlled lanes. If agents are able to learn, they should be run in typical scenario for the area, in order to give them initial state.
Unfortunately, it is often, that method how to set similar properties is not described in articles with descriptions of agents. Even a very efficient agent may give a poor performance, if these settings are incorrect. Settings also cannot be part of scenario, because agents are supposed to act autonomously, without an outer control. Another important thing is hierarchy of agents. If hierarchical

structure is used (for example (Roozemond, 2001) or (France and Ghorbani, 2003)), it also has to be part of description of the experiment. Even with the same setting of each crossroad-controlling agent, results may be different if they are grouped differently. It is caused by managing agents. They are helping to find global optimum within the group, so in different groups agents will be working on search of global optimum for different parts of the network.

The last part of description of experiment is selection of criterions and position of their measurement, if necessary. It is possible to observe and compare any amount of places in the network, as well as global statistics. Selected criteria are not effecting the work of agents, they are used only for their comparison.

Evaluation of experiment is basically evaluation of hypothesis that according to chosen criterion in given network and scenario, optimal control is achieved by one of used traffic control agents. Because this hypothesis is valid only for the whole experiment, it is important to perform several experiments to determine quality of control of one agent.

Proposed scenarios

In this part, several basic scenarios and the way how to create them is given. These scenarios may be used to compare performance of all described traffic agents.

The most basic scenario is steady traffic flow with static density. It shows ability of agent to ensure traffic fluency or priority of important roads. No changes are done during experiment, but several experiments with different densities should be performed to see capacity limits of agents and traffic network. In this case, even with very simple agents, traffic congestions are caused more by maximal capacity of the network, than by insufficient ability of agent to control network.

Similar experiment is dealing with fluctuating traffic flow. During experiment, density of traffic flow raises and drops several times. A typical example from the real world is a control of roads leading from residential areas to the city and back – during morning, there is a lot of traffic to the city and only few cars are going in opposite direction. During evening, situation is inverted; heavy traffic is in the direction from the city. This scenario shows ability of agent to adapt to different situations and to control traffic for the whole day. The period with unchanged traffic flow should be long enough in order to simulate real situation.

Ability of agent to solve congestions may be tested by heavy traffic flow, causing congestion at the beginning of the experiment. It may be created only on main road or on crossing of two main roads and propagates itself to the whole network. Some agents, as (Logi and Ritchie, 2002) are created specifically to solve congestions.

The last important scenario is reaction of agent to accident or any other type of roadblock. In this scenario, vehicles generators are working in the same manner as in normal situation, but turning probabilities or paths has to be changed. During preparation, it is necessary to decide where detour will be and change turning probabilities in all affected crossroads, not only on the one with accident. This shows ability of agent to react on rapid change of situation in controlled crossroad.

Example of experiment

As an example, we have tested agent proposed by Hirankitti and Krohkaew, and compared it to vehicle actuated signal control (simple dynamic system, capable only to prolong duration of green signal if vehicle is detected in the lane). Part of testing map is shown at Fig. 4. Results were measured at highlighted crossroad at bottom right, as a criterion we choose average length of queues in each lane at the end of red signal. Lanes are denoted by letters *a*. *f*.

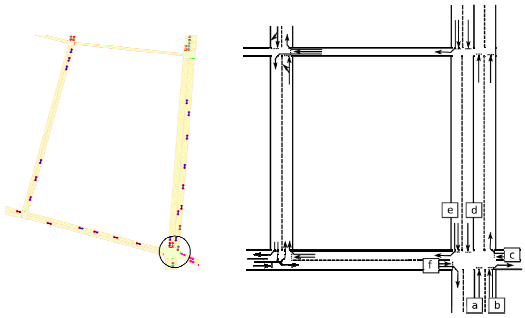

Figure 4: Screenshot from simulator and scheme of tested traffic network

We have tested two scenarios with the same number of simulation steps.. In both traffic density was changed several times. In first scenario, three peak of denser traffic were created, in second six peaks. During peak traffic density was two times higher between peaks.

Both control systems were set to prioritize main road (lanes *a,b,d,e*). It means longer green times were allowed in these lanes.

Results from both scenarios can be seen at Fig. 5. We may see, that Hirankitti's and Krohkaew's agent achieved better results (shorter queues, with the same traffic density means, that more cars were able to pass crossroad during each signal cycle), especially in the first scenario. With higher traffic density in second scenario, result of both systems is similar. This is caused by approaching to maximal road capacity.

Better results of VHJK agent are caused by better utilization of space in roads. VASC is only able to change duration of phases, according to number of vehicles in lanes with green signal. If there are vehicles only in one lane, VASC is still keeping the sama signal phase. VHJK is able to deal with such situation. If vehicles are only in one lane (for example a at Fig. 4), VHJK is able to find directions, which can have green signal in the same time (direction f at Fig. 4) and activate them in the same signal phase. Thus, if such situation often occurs, more vehicles can pass crossroad in constant time.

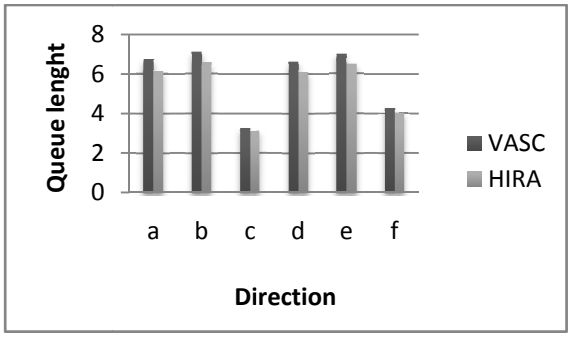

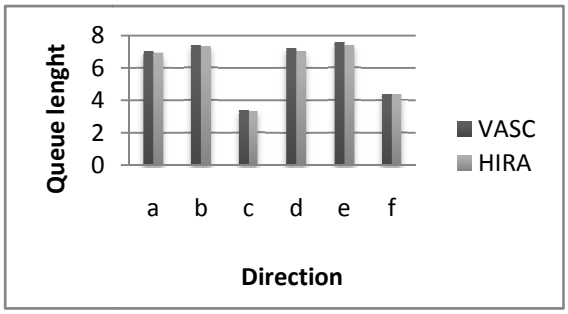

Figure 5: Comparison of VASC and VHJK for first (top) and second (bottom) scenario

FUTURE WORK

Our priority is to implement a number of proposed control agents and perform comparisons to determine their abilities and weak points. Before comparison, we need to validate our implementation of the agent's systems, by performing tests from the articles, where the agents are described in. If the results we obtain from our simulation are similar as the results from the articles, we assume that our implementation is valid.

One of problems in the traffic control is a decision what should be optimized. There is lot of criteria, and no clear way how to tell which is more important than the others. Designers of traffic networks and control systems may try to minimize length of queues or amount of time spend in congestions, or to maximize amount of vehicles passing through network during one hour, fluency of car movement or average speed of vehicle (other used criteria may be seen in (Guberinić et al. 2008)). Our goal is to find suitable method, which allows automatically decide which way of traffic control is at least semi-optimal for specified purposes.

ACKNOWLEDGEMENT

This work is partially supported by Ministry of Education, Youth, and Sport of Czech Republic – University spec. research – 1311.

REFERENCES

Balan, G. and Luke, S. 2006. "*History based Traffic Control*." Proceedings of the fifth international joint conference on Autonomous agents and multiagent systems (AAMAS'06). p. 616-621. ISBN: 1-59593-303-4.

Brooks, R. A. 1991. "*Intelligence without representation*." Artificial Intelligence 47, p. 139-160.

France, J and Ghorbani, A. 2003. "A Multiagent System for Optimization Urban Traffic." *Proceedings of the IEEE/WIC International Conference on Intelligent Agent Technology (IAT'03)*. IEEE Computer Society, Washington DC, USA. p. 411-414. ISBN: 0-7695-1931-8.

Guberinić, S., Šenborn G. and Lazić B. 2008. Optimal Traffic Control. CRC Press, Broken Sound Parkway NW, Boca Raton, USA. ISBN: 978-1-4200-6268-7.

Hartman, D. Traffic Simulation Using Bulk Systems (Modelování dopravní situace systém hromadné obsluhy). 2003. University of West Bohemia, diploma thesis.

Hirankitti, V. and Krohkaew, J. 2007. "*An Agent Approach for Intelligent Traffic Control*." Proceedings of the First Asia International Conference on Modelling and Simulation (AMS'07). p. 496-501. ISBN: 0-7695-2845-7.

Hoar, R., Penner, J. and Jacob C. 2002. "*Evolutionary Swarm Traffic: If Ant Roads Had Traffic Lights.*" Proceedings of the Evolutionary Computation on 2002 (CEC '02). p. 1910-1915. ISBN: 0-7803-7285-4.

Katwijk, R. and Koningsbruggen, P. 2002. "Coordination of traffic management instruments using agent technology." *Transportation research Part C: Emerging Technologies*. Vol. 10, no. 5-6, p. 455-471. ISSN: 0968-090X.

Logi, F. and Ritchie, S. 2002. "A Multi-agent Architecture for Cooperative Inter-jurisdictional Traffic Congestion Management." *Transportation research Part C: Emerging Technologies.* Vol. 10, no. 5-6, p. 507-527. ISSN: 0968-090X.

Mizuno, K., Fukui, Y. and Nishihara, S. 2008. "*Urban Traffic Signal Control Based on Distributed Constraint Satisfaction.*" Proceedings of the 41st Hawaii International Conference on Systems Sciences. p. 65. ISBN ~ ISSN:1530-1605, 0-7695-3075-8.

Roozemond, D. 2001. "Using intelligent agents for pro-active, real-time urban intersection control." *European Journal of Operational Research.* Vol. 131, issue 2, p. 293-301. ISSN: 0377-2217.

Russell, S. and Norvig, P. Artificial Intelligence: A Modern Approach (2nd Edition). Prentice Hall, New Jersey, USA. ISBN: 0137903952.

Wooldridge, M. and Jennings, N. 1995. "*Intelligent agents: Theory and practice*." Knowledge engineering review. Vol. 10, p. 115-152. ISSN: 0269-8889.

AUTHOR BIOGRAPHIES

RICHARD LIPKA was born in Plzeň, Czech Republic and went to University of West Bohemia, where he obtained master degree in 2007. Since then, he is PhD student at Department of Computer Sciences and Software Engineering of UWB. He is focusing on road traffic simulation and agent control of large networks. His e-mail address is : lipka@kiv.zcu.cz .

PAVEL HEROUT was born in Plzeň, Czech Republic. Graduated in 1985 at the Institute of Techology in Pilsen in specialization Electronic computers. In 1999 he defended his PhD thesis in computer science. He works as an associate professor at the Faculty of Applied Sciences. His professional interests are programming languages, simulation systems and fault-tolerant computing. His e-mail address is: herout@kiv.zcu.cz