MODEL OF THE ELECTROMAGNETIC LINEAR ACTUATOR FOR OPTIMIZATION PURPOSES

Paweł Piskur
Wojciech Tarnowski
Krzysztof Just
Department of Mechatronics, Nanotechnology and Vacuum Technology
Koszalin Technical University
75-620, Koszalin, Poland
E-mail: pawel.piskur@interia.pl, wojciech.tarnowski@tu.koszalin.pl, justk5@op.pl

KEYWORDS

Multidisciplinary modeling, electromagnetic linear actuator, optimization, genetic algorithms.

ABSTRACT

The goal is to present a more accurate model for optimization of design and of a supply control. The object is an electromagnetic linear actuator which is built of series of coils and of a ferromagnetic moving core. The coils are supplied by time series of current impulses. Even though that linear electromagnetic actuators are commonly known their applications are not wide. This is mainly because of the low energy efficiency. The efficiency is here understood as a ratio of the kinetic energy of the core at the outlet of the device to the electric supply energy delivered to the coil. The efficiency can be improved by design parameters optimization and by the accurate supply control, as well, but an adequate accuracy of the mathematical model is required for optimization process. In this paper a simulation model is presented, with a careful consideration of the hysteresis of ferromagnetic parts, of nonlinear distribution of the magnetic field and of the dimensions of all coils. The time-dependent non-uniformly distributed magnetic field is analyzed by the FEM method. The computer simulation results and experimental data of magnetic flux density are compared. Special sensors of the Colossal Magneto-Resistance (CMR) effect have been used for verification of the simulation results (Balevicius et al. 2005, Schneider et al. 2007). The Multi-Attribute optimization has been completed and the Pareto set is defined, by evolutionary optimization methods.

INTRODUCTION

In many industrial processes like riveting, hammering, marking, making holes in hard or crisp materials, connecting of metal sheet using a cold-forming process, etc. linear actuators with the high velocity of displacement of the moving part are necessary. If the velocity is of a prime importance, electromechanical actuators may be useful. The main advantages of the electromagnetic linear actuators are the simple design structure, the fast response for the input signal, a possibility to achieve a high linear acceleration and a low cost of the maintenance. Moreover, a linear motion is a natural output, so there is no need of any mechanical transmission. On the other hand, the main drawbacks are: a low energy efficiency and a need of the great power current impulse source (Howe 2000, Seog-Whan et al. 1996).

The linear mathematical model of electromagnetic actuator is sufficient in many considerations, but not if a more accurate calculations are needed (Tarnowski 2004). Such model can be used for investigation of the influence of some part of the object and then an optimization of the object is possible. For that reason, the number of assumptions and simplifications should be omitted.

OBJECT OF INVESTIGATION

The general design of the electromagnetic linear actuator is presented on Figure 1. It is built of a series of coils and of a ferromagnetic or magnetic moving core. The coils are supplied by series of current impulses. Here only a single coil system is discussed.

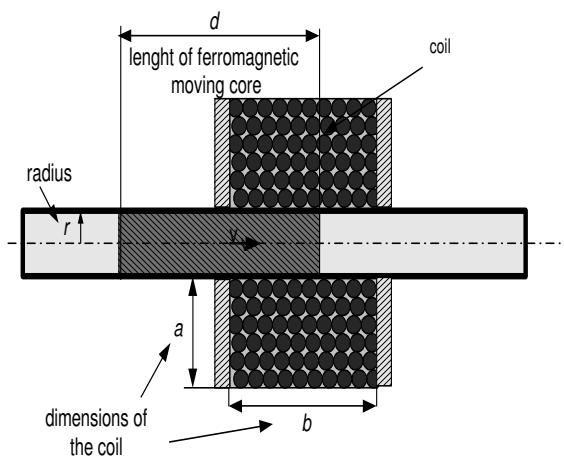

Figure 1: General design of the electromagnetic linear actuator

Proceedings 23rd European Conference on Modelling and Simulation ©ECMS Javier Otamendi, Andrzej Bargiela, José Luis Montes, Luis Miguel Doncel Pedrera (Editors)
ISBN: 978-0-9553018-8-9 / ISBN: 978-0-9553018-9-6 (CD)

THEORY - MATHEMATICAL MODEL

The magnetic coil energy and the electric energy are coupled, and the interchange depends also on the position of the core. What more, eddy currents are induced in the core. A distribution of the magnetic field is not uniform neither in the air gap nor in the ferromagnetic parts of the devices so it must be modeled as a continuous in space. If the core velocity is not high, the air pressure resistance may be omitted. Also electrical properties may be accepted as discrete in space, as the current changes in coils are comparatively slow. As the motion process of the core is short, the temperature increase is small and the process may be assumed as an isotermic and all material parameters to be constant, unless the process is repetitive with the same core. To summarize, there are many nonlinear phenomena, and they are strongly coupled.

Electromagnetic filed

The hysteresis of electromagnetic parts and the non-uniform distribution of the magnetic filed should be included (see Figure 2). The non-analytic relation between the magnetic field strength H and the magnetic flux density B can be described as a table with series values and then introduced into computer model (ComsolMultiphysic's User's Guide 2003).

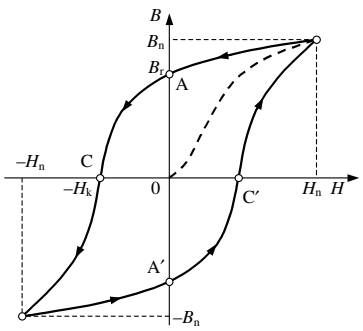

Figure 2: Hysteresis of the ferromagnetic part

Distribution of the electromagnetic field of the linear actuator can be described by the Maxwell equation:

$$\sigma\frac{\partial A}{\partial t}+\nabla\times(\frac{1}{\mu_0\mu_r}\nabla\times A)-\sigma v\times(\nabla\times A)=j_{ext.} \qquad (1)$$

where:
σ – electric conductivity;
μ – permeability;
$j_{ext.}$ – current density due to an external source;
A – vector potential;
and the magnetic flux density is given by:

$$B=\nabla\ x\ A \qquad (2)$$

When we write this equation in the cylindrical coordinates, the symmetry assumptions imply that both the external current density j_{ext} and the vector potential A have only an angular component, and the derivative with respect to the angle vanishes. Rewriting the rotation operator in cylindrical coordinates, we obtain Maxwell's equation for the angular component ψ. It can be defined as a new dependent variable:

$$u=A_\psi/r \qquad (3)$$

Writing $\nabla=(\partial_r,\partial_z)$, we obtain the form of the Maxwell equation which has been used in simulation:

$$\sigma\ r\frac{\partial u}{\partial t}-\nabla\times(\frac{1}{\mu_0\mu_r}\nabla\times u)-\frac{\partial}{\partial r}(\frac{2}{\mu_0\mu_r}u)+ \\ +\sigma(r\ v\ \nabla u+2\ v\ u)=j_{ext.,\psi} \qquad (4)$$

Electrical sub-system

One way to define the current source is to specify a distributed current density in the right-hand side of the equation 4. The current I may be calculated as an integral of the current density:

$$\int_S \rho_j ds=j \qquad (5)$$

Current density ρ_j in a coil is limited by the heat losses and capabilities of power supply:

$$\rho_j\le\frac{j_{\max}}{\frac{\pi d^2}{4}}\ [\frac{A}{m^2}] \qquad (6)$$

where: d – is a diameter of copper windings of coil. The number of winding-turns is a function of dimension of coil and the fill factor:

$$a\cdot b\cdot\rho\cdot 0{,}7=j_{\max}\cdot z \qquad (7)$$

where: a, b – are dimensions of coil (see Figure 1).

Mechanical sub-system

For computing the total electromagnetic force the equation presented below has been used:

$$ma=\int_{\Omega_1}\rho\frac{d^2r}{dt^2}dV=F \qquad (8)$$

The total force is computed as a boundary integral of the stress tensor in vacuum on the outside sub-space of the solid. The contribution from the air pressure gradient has been neglected. The electromagnetic force implemented in Matlab program is used for computing the displacement value.

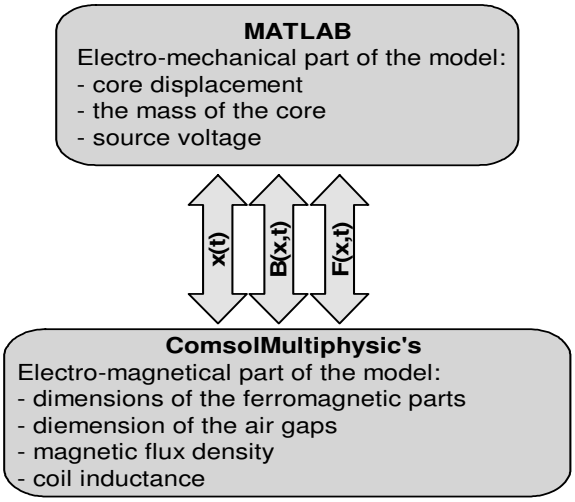

Figure 3: Exchange of data between programs

The mechanical equations have been implemented in the Matlab program and the Maxwell equations have been used by ComsolMultiphysic's. Two programs are working together respectively. In the Figure 3 an interchange of data between the two programs is shown. The simulation results are presented as a sequence of series points in the Figure 7, 9 and 11.

SIMULATION AND EXPERIMENTAL RESULT

The goal of experiments was to check a possibility to measure the electromagnetic flux density *B* inside the coil and to verify of the simulation model. In the Figure 4 the view of the model implemented in the FEM program is shown. In the Figure 6-11 magnetic flux density is presented as a function of time for the better analysis of the simulation result.

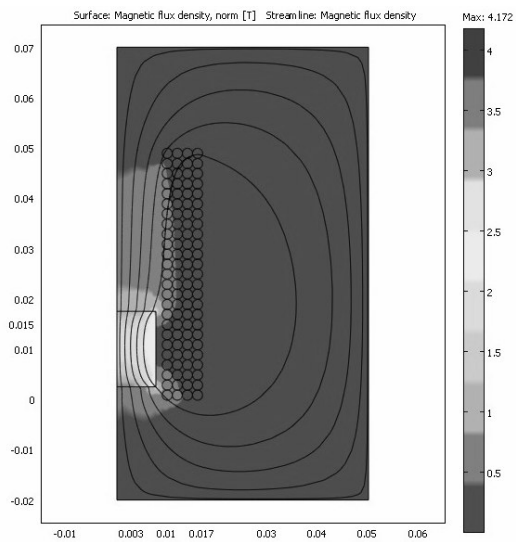

Figure 4: Magnetic flux density simulated in the FEM model

Experiments have been conducted for three cases:

- coil without ferromagnetic core;
- coil with fixed ferromagnetic core;
- coil with moving ferromagnetic core.

Special sensors of the Colossal Magneto-Resistance (CMR) effect have been used for verification of the simulation results.[1] Figure 5 shows a schematic diagram of the experimental set-up and measurement equipment.

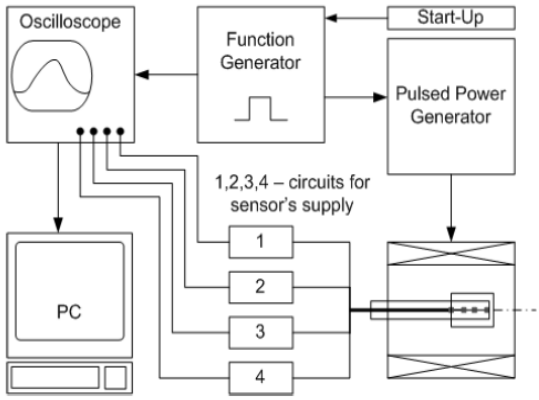

Figure 5: Schematic diagram of the experiment and measurement equipment (Balevicius et al. 2005)

The magnetic field generator (with the main components: capacitors, thyristors and coil) is triggered by a single pulse produced by a function generator. After ignition the thyristor connects the capacitor to the coil. The trigger signal also triggered the oscilloscope, which is used for visualization of the signal measurement by CMR-sensors. The sensors were placed inside the coil in space between the inner windings of the coil and moving ferromagnetic core. For data storage, the oscilloscope output was connected to a personal computer (PC).

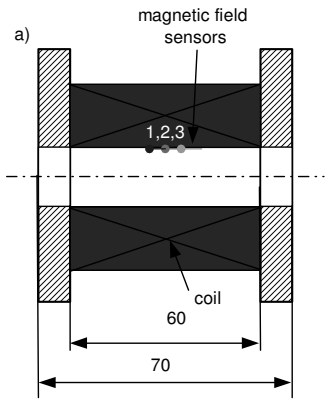

Figure 6: The measurement position of the CMR sensors with reference to the inner coil surface

[1] The experiments were performed in Semiconductor Physics Institute, Vilnius, Lithuania.

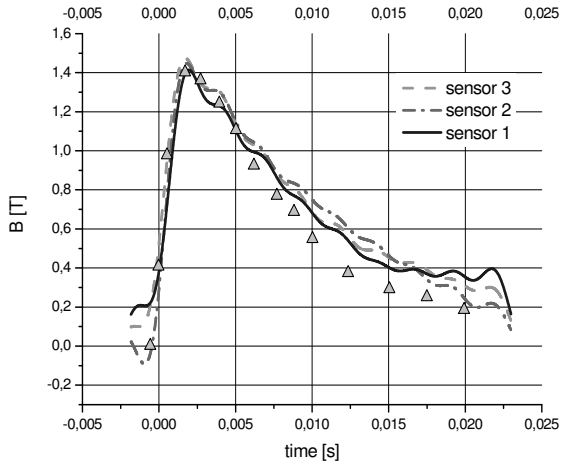

Figure 7: Comparison between experimental and simulation results for the coil without a ferromagnetic core, measured by three sensors (see text)

Pulsed magnetic fields were generated by a multiple winding coil with 25 windings in each of 4 layers, outer diameter of 32 mm, length of 60 mm, and inner diameter 14.4 mm. The resistance of the coil was $R_0 = 0.2$ mΩ and the inductance $L_0 = 40$ nH. The pulse power generator included a capacity of 2240 μF. The sensors were situated in center of the coil in distance 5 mm from each other. The experimental results are presented as the three color lines in the Figure 7. The magnetic flux density was measured as a function of time and achieves value of about 1.4 T. The simulation results are presented as small triangles in the Figure 7. The simulation and experimental results are very similar.

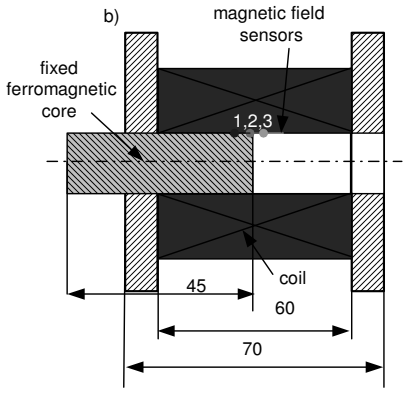

Figure 8: Sensors system for the magnetic field with fixed ferromagnetic core

Another experiment was to simulate magnetic flux density changes as a function of different current in time with fixed ferromagnetic core. The sensor number 1 was situated in closed distance to the ferromagnetic core. The sensor value is smaller than for the sensor number 3 situated out of the core. This is because nonlinear distribution of magnetic field disturbed by ferromagnetic core inside the coil. Some of the result simulation was presented as a triangle (for the place where sensor number 3 is situated) and circle points (for the place where sensor number 1 is situated) in function of time and current value.

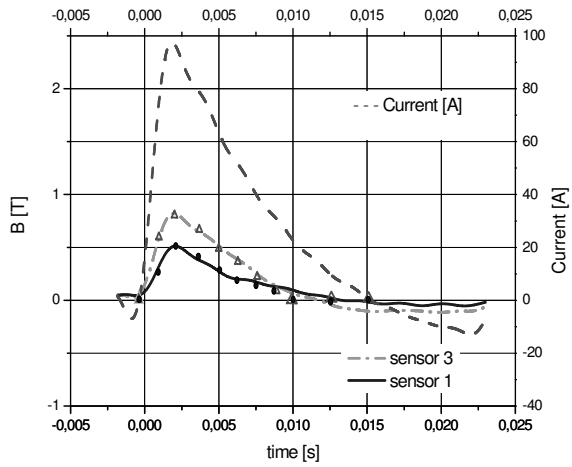

Figure 9: Comparison between experimental and simulation results for the coil with fixed ferromagnetic core, measurement by two sensors (see text)

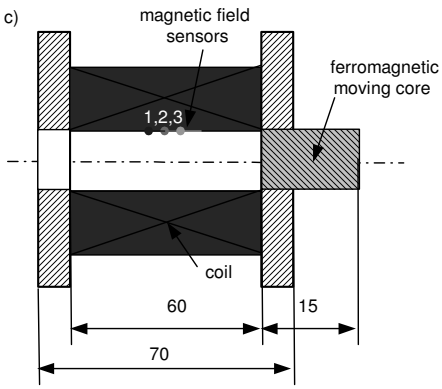

Figure 10: Comparison between experimental and simulation result for coil with moving ferromagnetic core measurement by three sensors (see text)

The next verification of the simulation model was to measure magnetic flux density as a function of moving ferromagnetic core and as a function of different current in time. It can be seen in the Figure 11 the electromagnetic flux density is cumulated in the ferromagnetic core when the core is moving closed the sensors. The current changes are shown in the red color. The core is moving near the sensors in sequence: the sensor number 3, the sensor number 2 and the sensor number 1. The triangle points in the Figure 11 are the simulation results respectively to the place of the simulation points. The simulation points are the same as the place of CMR sensors.

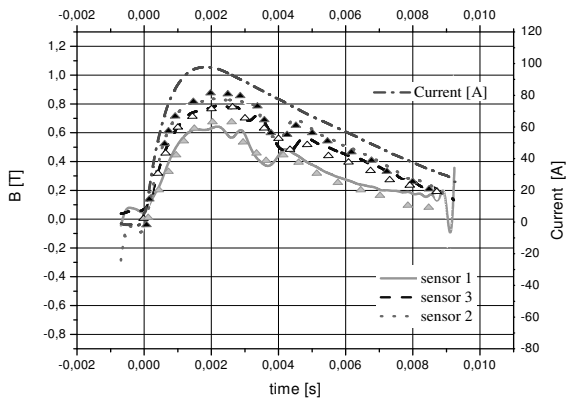

Figure 11: Comparison between experimental and simulation result for coil with moving ferromagnetic core measurement by three sensors (see text)

OPTIMIZATION PROCESS

Having completed a verification and validation of the simulation model an optimization of the actuator design may be considered (Fischer et al. 2003, Tarnowski 2004). The poly-optimization problem which is shown below is to be a proof that the presented simulation model is generally capable for optimization.

The goal of the system is to accelerate the ferromagnetic moving core to achieve a demanded kinetic energy, with restriction to the dimension and the total mass of the device. The main functional criterion is the power efficiency – here understood as a ratio of the kinetic energy of the core at the outlet of device to the electric supply energy delivered to the coil. An important parameter is the outlet velocity of the ferromagnetic moving core: if one demand a high speed, also the current in the coil must quickly increase and after a very short period of time decrease to zero. To achieve it by a constant voltage, a small inductance is necessary. Thus we decide to adopt the coil inductance as another optimality criterion. If the electrical power supply sub-system is unable to deliver such a short impulse of current, the dimensions (and the mass) of the ferromagnetic moving core should be changed and optimization process should be resumed.

The adopted decision variables are: dimension of the coil (a, b – see Figure 1), dimension of the ferromagnetic moving core (d, r – see Figure 1). The inner radius of coil is almost equal to the outer radius of ferromagnetic core.

In the past, the optimization process was conducted by full decision space survey approach (Piskur and Tarnowski 2007). But this technique is not very efficient naturally. Gradient methods seems to be not very efficient due to the fact, that single goal function computing takes not less than 20 seconds and what more we have had no initial knowledge about the shape of the goal function (a monotony and local minima).

To find the optimal solution(s) we adopt the genetic algorithms techniques. It is important how many decisions variables are used, how many iteration should be declared and how numerous population should be adopted.

The number of genes and iteration are limited by the computer power. What more the genetic algorithms enable to determine the minimum value of force and the maximal value of the coil inductance as the penalty function in the fitness function. In the Figure 12 the example of evaluation function is shown. On the vertical axis the inductance of the coil value is presented and on the horizontal axis the electromagnetic force is presented. As the optimization process is searching for the minimal value of the function the electromagnetic force is set as negative amount.

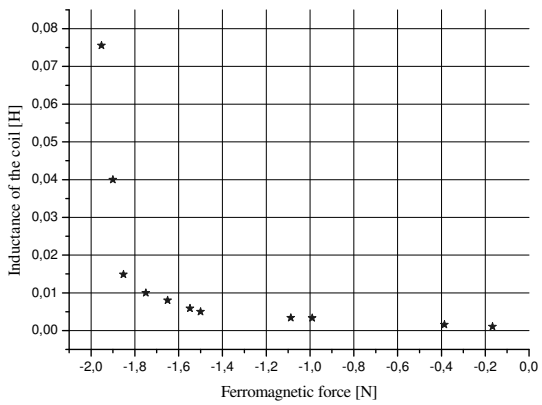

Figure 12: Example of the Pareto optimal solution.

METHODOLOGY OUTLINE

To complete an adequate mathematical model the following actions are recommended:

1. Definition and specification of the object and its environment. On the basis of designation of the model, determination its accuracy and scope of validity.
2. Identification of all processes and relations in the object.
3. For each phenomenon define assumptions and simplifications. Taking a decision whether the phenomenon is space distributed or discrete. If distributed, assuming continuity, symmetry and number of space dimensions (1D, 2D or 3D)
4. Definition of mathematical relations.
5. Decision on how to solve the model. As the rule, it comprises nonlinear partial or ordinary equations, so computer programme is necessary. A commercial package would be the best choice, but in the case of many various energy streams involved (eg. Multiphisics case), probably one does not find any commercial code and one must device a special programme.
6. Verification the code; validation the model.

CONCLUDING REMARKS

Mathematical modeling of dynamic transient processes for computer simulation purposes in some objects requires that a few various energy streams must be considered (the Multiphysics case). Also in many cases the energy density field is non-uniform in the 3D space, so the partial differential equations must be applied, and they are non-linear if a better accuracy is expected. As a rule, they have no analytic solutions, and the finite element paradigm is to be used.

For the object under consideration a multidisciplinary model must combine the finite element analysis with other computational engineering tools and applications such as the control system design, signal processing and dynamic simulations.

Because of the model symmetry and the long simulation computation time only half of the electromagnetic device has been to take under consideration. In this model a few physical phenomena is solved simultaneously. It can be useful to observe much output information in specific points of the device as a function of input construction data.

An adequate accuracy of the model is required for optimization process. In the future investigations the multidisciplinary model will be used for the control algorithm optimization process.

REFERENCES

Balevicius S.; Zurauskiene N.; Stankevic V.; Kersulis S.; Novickij J.; Altgibers L.L. and F. Clarke, Jan. 2005: "High pulsed magnetic field sensor based on La-CaMn-O thin polycrystalline films," Acta Physica Polonica, vol.A 107, pp. 207–210,.

Tarnowski, W. 2004: „Modelowanie systemów." (Modelling of Engineering Systems, In Polish), Koszalin University of Technology Publishing House,

Tarnowski, W.; 2001: „Symulacja i optymalizacja w Matlab'ie." (Simulation and Optimization in Matlab, in Polish), Maritime Academy, Gdynia. 154-168.

ComsolMultiphysics; 2003: Multidisciplinary models – User's Gide. 118-129.

Schneider M.; Schneider R.; Stankevic V.; Balevicius S. and Zurauskiene N.; 2007: "Highly Local Measurements of Strong Transient Magnetic Fields During Railgun Experiments Using CMR-Based Sensors" IEEE Transactions on magnetics, vol. 43, no. 1, p. 370-375.

Fischer V.; Gerbaud L.; Wurtz F.; 2005 "Using automatic code differentiation for optimization", IEEE Transactions on magnetics, vol. 41, no. 5, p. 1812-1815.

Howe D.; 2000: "Magnetic actuators" Sensors and Actuators p. 268-274.

Seog-Whan K., Hyun-Kyo J., Song-Yop H.; March 1996: "Optimal Design of Multistage Coilgun". IEEE Transactions on Magnetics, Vol. 32, No. 2.

Piskur P., Tarnowski W.: 2007, „Poly-optimization of coil in electromagnetic linear actuator". (in:) „Recent Advances in Mechatronics", Springer Berlin, 283-287.

ABOUT AUTHORS

PAWEŁ PISKUR has been graduated by Military University of Technology in Warsaw with a degree in Airplane Studies in 2004. He works for the Marine Aviation Base in Polish Army. Since 2004 he is at Koszalin University of Technology to study for the doctor degree. His research area is strictly connected with simulation and optimization of a high speed electromagnetic linear actuator. His e-mail address is:
pawel.piskur@interia.pl.

WOJCIECH TARNOWSKI is a professor of control engineering and machine design at University of Engineering in Koszalin, Poland. He is an author of a few books and numerous articles on mathematical modelling, design of control systems in industry and precision engineering. Also he is a chairman of a yearly national conference on poly-optimization since 1981.
He is and has been a supervisor of a dozen of PhD students. His e-mail address is:
wojciech.tarnowski@tu.koszalin.pl.

KRZYSZTOF JUST has been graduated by Military University of Technology in Warsaw with a degree in Airplane Studies in 2004. He works for the Marine Aviation Base in Polish Army. Since 2005 he is studying for the doctor degree at Koszalin University of Technology. His research area is connected with electromagnetic linear actuators. His e-mail address is:
justk5@op.pl