ANALYSIS OF DIRECT PUNCH FORCE IN PROFESSIONAL DEFENCE

Dora Lapkova, Milan Adamek, Zuzana Komínková Oplatková

Tomas Bata University in Zlin, Faculty of Applied Informatics
Nam T.G. Masaryka 5555, 760 01 Zlin, Czech Republic
{dlapkova, adamek, oplatkova}@fai.utb.cz

KEYWORDS
Professional defence, Direct punch, Analysis, Force, Strain gauge, Artificial neural network

ABSTRACT

This article is focused on presenting our research about direct punch force. Professional defence is very important part of our life and punches are basic technique in majority of martial arts. Our aim was to measure dependence of force on time. Then we found differences between genders and among groups of participants with different level of training. The analysis started with measuring of the force with help of strain gauge L6E-C3-300kg and then we continued with finding of the dependence of this force on time and on input parameters. For data analysis two pieces of software were used – Office Excel and MINITAB. Our goal was to prepare data for an artificial neural network.

INTRODUCTION

Professional defence is a field which is primarily focused on the legal protection of personal interests. It covers various areas - theory and practice of defence, attack and prevention, scientific disciplines such as tactics (e.g. skill in the counter attack), strategy (precautionary action) and operation (behaviour after a conflict situation). Moreover, it includes the knowledge of somatology and the chosen parts of crisis management, especially the phases of the conflict and solutions to conflict situations (Lapkova et al., 2012).
Striking techniques are very important part in majority of martial arts (Gianino, 2010), combat sports (Blower, 2007) or combat systems (Levine et al., 2007). Direct punch is based on energy which is transferred through arms, particularly through closed fist (Fig. 1). This type of punch is delivered by the arm following a direct line. The aim is to stop the attacker and increase distance between the defender and an attacker. In the following experiment the punch was delivered by the back hand (Lapkova et al., 2014 a).
The aim of our experiment was to measure the force of direct punch and then to find out dependence of force on inputs parameters – a training level and a gender. In the second step of experiment we analyzed data with help of statistical analysis and characteristic parameters – a maximum force, a standard deviation, a mean force etc. were found out.

Figure 1: Direct punch

In the past research, a direct kick and a round kick were classified via artificial neural networks (Lapkova et al. 2014 c, Lapkova et al. 2014 d). In these two cases, the artificial neural network was used to distinguish a gender and a training level of participants. In another paper (Lapkova et al. 2014 a),,authors achieved very good results in distinguishing between genders in the case of the direct punch.
In this paper, we have tried to find new classifiers to obtain better results. The reason is worse results for direct punch compared to the direct kick and the round kick. The basis is very good statistical data analysis and finding new possibilities for inputs of the artificial neural networks.
Firstly, a short introduction into artificial neural networks is given with the view into the past research. The following part describes a measuring station. Experiment setup and data analysis conclude the paper.

ARTIFICIAL NEURAL NETWORKS

Artificial neural networks are inspired in the biological neural nets and are used for complex and difficult tasks (Hertz et al., 1991), (Wasserman, 1980), (Gurney, 1997), (Fausset, 2003). The most often usage is classification of objects as also in this case. ANNs are capable of generalization and hence the classification is natural for them. Some other possibilities are in pattern recognition, control, filtering of signals and also data approximation and others.
There are several kinds of ANN. Simulations were performed with feedforward net with supervision and Levenberg-Marquardt training algorithm (Fausset, 2003). ANN needs a training set of known solutions to be learned on them. Supervised ANN has to have input and also required output. ANN with unsupervised

Proceedings 29th European Conference on Modelling and Simulation ©ECMS Valeri M. Mladenov, Petia Georgieva, Grisha Spasov, Galidiya Petrova (Editors)
ISBN: 978-0-9932440-0-1 / ISBN: 978-0-9932440-1-8 (CD)

learning exists and there a capability of selforganization is applied.

PAST RESEARCH EXPERIMENTS

Experiment 1: The aim was to distinguish between the direct kick and the round kick with the respect to training level. The training set consist of only 103 participants. A set of statistical values was used to represent each force profile for the classification. Three different spectral sequences were derived from the force profiles. The first one was in the range from 3N to 53N with the bandwidth 10N. The second one was in range from 73N to 133N with the bandwidth 20N. Finally, the third one was starting at 201N and ending at 801N with the bandwidth of 200N. By this approach eleven integer number inputs for classification were obtained for each force profile. As the last (twelfth) input the rounded median value was used (Lapkova et al., 2014 c). All these 12 inputs were inputs into ANN with the sigmoid functions in 2 - 7 hidden nodes. Reached simulations results are presented in Tab. 1.

Table 1: Results for experiment 1 - UTM (untrained men), MTM (mid-trained men), TM (trained men), UTW (untrained women)

Group	Nodes in hidden layer	Iterations	Success rate %	
			Training set	Testing set
UTM	3	60	95,9	90,7
MTM	2	60	96,9	89,7
TM	3	40	100	91,7
UTW	7	60	95	91

Experiment 2: We used the ANN to distinguish between genders in case of direct punch, direct kick and round kick. In this research we used 20 participants. To identify the dynamics of striking techniques performed by men and women, the discrete cosine transformation (DCT) was applied on the force profiles. Values no. 4 – 13 from the generated DCT vector were taken. These nine values were joined with the count of values no. 1 (including rounding) in the force profile. Thus ten numeric values representing each force profile were created and served as input data for the ANN (Lapkova et al., 2014 a), (Lapkova et al., 2014 d). Obtained results are presented in Tab. 2.

Table 2: Results for experiment 2

Technique	Nodes in hidden layer	Iterations	Success rate %	
			Training set	Testing set
Direct punch	9	80	99	71
Direct kick	6	140	99	86
Round kick	1	60	100	87

In experiment 1 we used mean value as the last input for the ANN. The current aim of this paper is to find some better statistical value, which could be used as a new or additional input into the ANN.

MEASURING DEVICES

The strain gauge sensor L6E-C3-300kg (Fig. 2.) works as unilaterally cantilever bending beam. During force delivery the biggest deformation of sensor is in places with the thinnest walls – there are metal film strain gauges which change their electrical resistance depending on deformation (Lapkova et al., 2014 a).

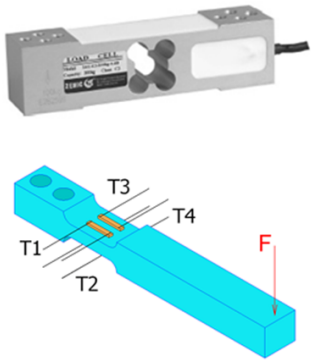

Figure 2: Strain gauge sensor L6E-C3-300kg

Strain gauges are plugged in Wheatstone bridge and this way it is possible to convert difference of resistance to electrical signal which we can process (Lapkova et al., 2014 a).
The strain gauge type L6E-C3-300kg is an electronic appliance that converts the signals to data that is stored in memory. The core of the appliance is a single-chip microcomputer that controls all of the activities. The strain gauge sensor is connected to this appliance via four-pole connector XLR by four conductors. The number of values measured by the sensor averages around 600 measurements per second while the data are immediately stored in the memory of a device with a capacity of 512 kB (Lapkova et al., 2012).
The mentioned above strain gauge sensor was placed on the measuring station according to the following schematic (Fig. 3 and Fig. 4):

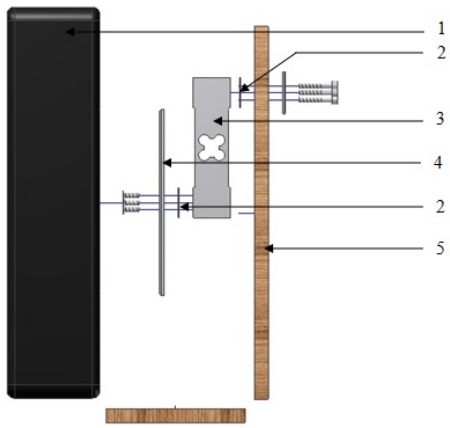

Figure 3: Part of measuring station – spread and side view (Lapkova et al., 2014 d)

1 – punching bag (made from hardened vinyl filled with foam)
2 – template
3 – strain gauge sensor L6E-C3-300kg
4 – board (200 x 200 x 5 mm)
5 – punching bag base

Figure 4: Part of measuring station – front view

The strain gauge is connected to the computer, which is used for data storage. You can see the whole measuring station in Fig. 5 and Fig. 6.

Figure 5: Measuring station

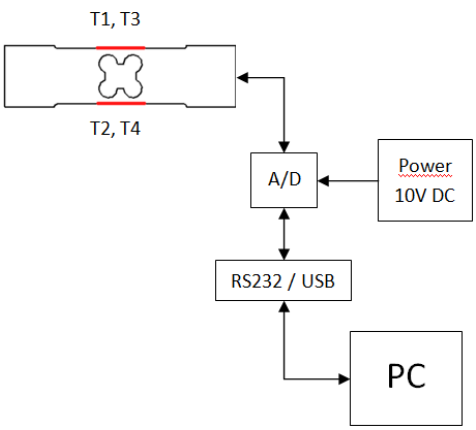

Figure 6: Measuring station - schematic

EXPERIMENT SETUP

The total of 220 participants took part in the experiment; 192 men and 28 women. All participants were in the age from 19 to 25.
Based on previous training and experience the participants were divided into following categories:

- Untrained – These people have never done any combat sport, martial art or combat system. They have no theoretical knowledge of the striking technique. The technique was presented to these people before the experiment for safety reasons. Noted further as UTM (for men) and UTW (for women).
- Mid-trained - These people have the theoretical knowledge of striking techniques and do attend the Special physical training course for at least six months. The course is focused on self-defense and professional defense. Noted further as MTM (for men) and MTW (for women).
- Trained – These people have attended the Special physical training course for two or more years or practiced a combat sport or martial art for the same time period. Noted further as TM (for men) and TW (for women).
- Self-trained - These people did practice or still do practice (for less than 2 years) some combat sport, martial art or combat system. As there is no guaranty on the quality of the training they are separated into separate category. Noted further as STM (for men) and STW (for women).

During the experiment, each person made from one to twenty strikes. During the measurement the target was positioned in such manner that the center of the strain gauge sensor was in line with the striking person´s shoulder. That way the direct punch has the maximum velocity and force (as there is no decomposition of force or velocity into other axes). The person was made to stay at the same place for the whole experiment. Any unnecessary movement (e. g. lunge etc.) would lead to data distortion (Lapkova et al., 2014 b).
The exact numbers of participants in each group are given in Table 3.

Table 3: The number of participants and samples in groups

Group	Number of participants	Number of samples
UTM	81	729
MTM	58	581
SM	37	361
TM	16	149
UTW	12	111
MTW	8	90
SW	2	20
TW	6	69
Total number	**220**	**2110**

DATA ANALYSIS

For data analysis we used two pieces of software – Office Excel and MINITAB. MINITAB is software for statistical analysis and for creating graphs.
In this research, various dependencies are important for observing. The dependence of mean force on time is depicted in Fig. 7 and Fig. 8. In the Fig. 8 part of the whole graph of force is depicted only for better data recognition.

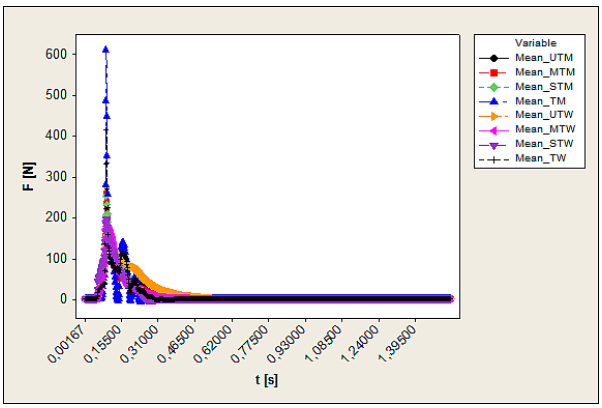

Figure 7: Dependence of mean force on time – whole graph

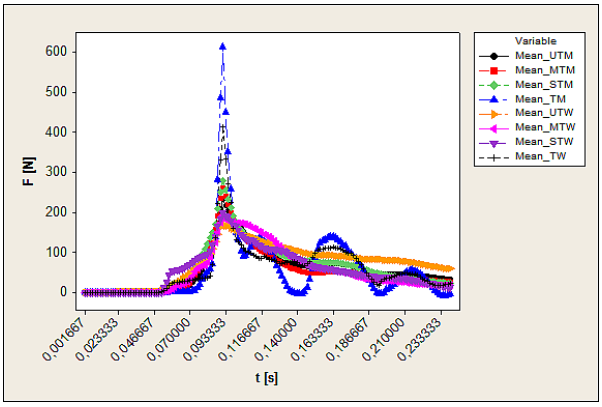

Figure 8: Dependence of mean force on time - shortened graph

Fig. 9 and Fig. 10 show dependencies of mean force on time - men and women separately.

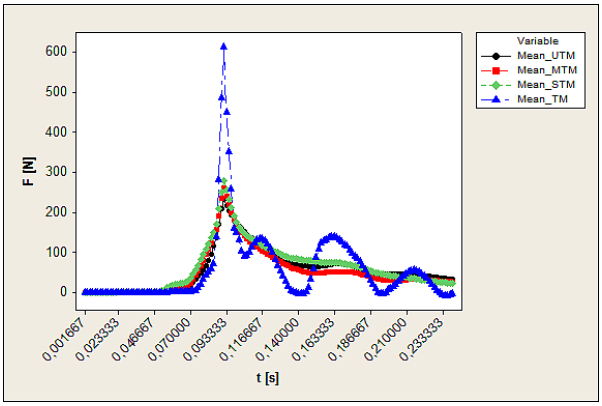

Figure 9: Dependence of mean force on time for men

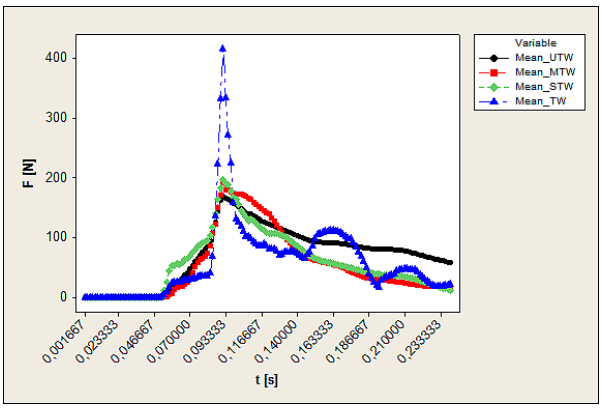

Figure 10: Dependence of mean force on time for women

In the following figures (Fig. 11 - Fig. 14), comparison between dependencies of mean force on time for each training level is visible. Women have always weaker punch than men but in some category the difference is not as significant as authors would expect.

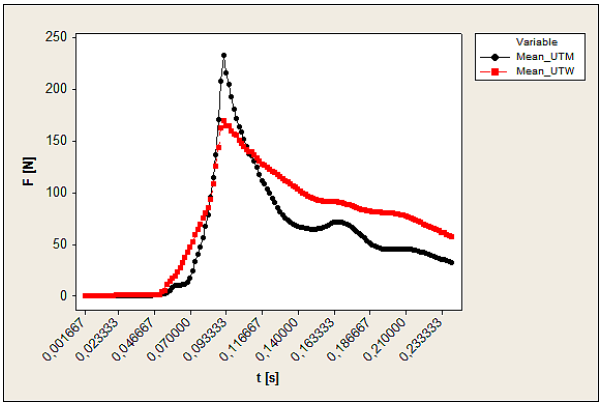

Figure 11: Dependence of mean force on time for untrained men and untrained women

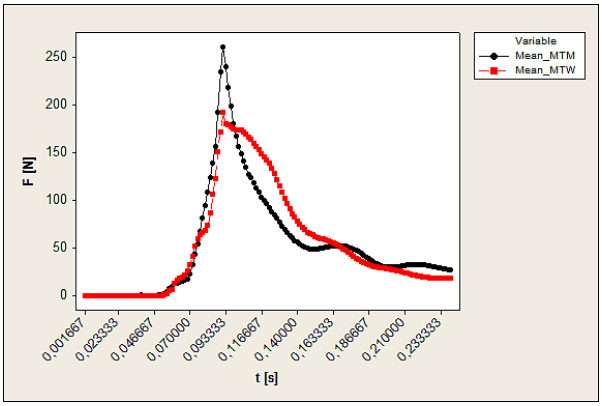

Figure 12: Dependence of mean force on time for mid-trained men and mid-trained women

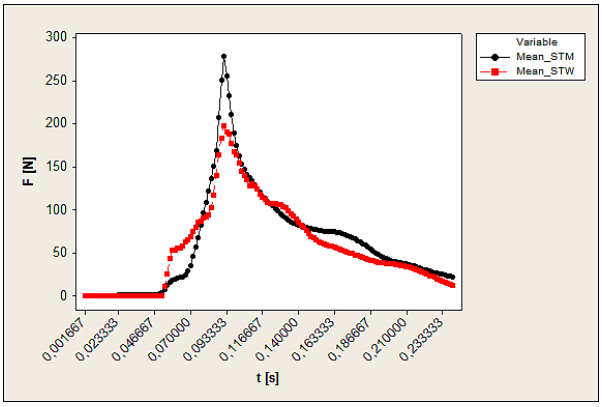

Figure 13: Dependence of mean force on time for self-trained men and self-trained women

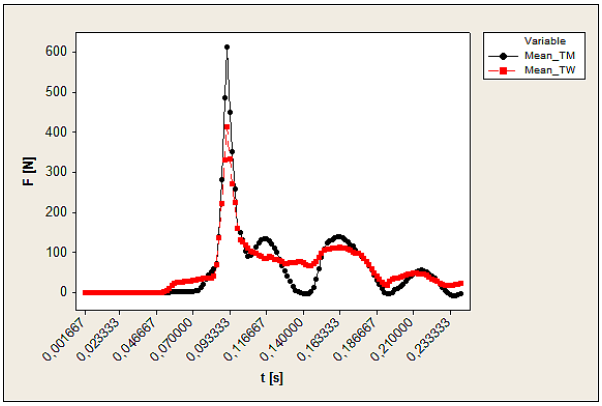

Figure 14: Dependence of mean force on time for trained men and trained women

MINITAB is also useful for statistical analysis of data. In Table 4, results for each category – especially mean of force, maximum force and standard deviation are shown. Table 5 is focused on maximum force and on standard deviation. As can be seen, the maximum values are more different between each group than the mean. Therefore the future testing of ANN will use this additional input value and comparisons will be made.

Table 4: Results overview for each category

	Mean	StDev of mean	CoefVar	Maximum
UTM	23,148	48,08	240,59	233,76
MTM	17,522	44,512	313,25	260,37
STM	28,42	55,91	228,37	279,12
TM	27,75	88,92	499	612,7
UTW	15,17	36,157	265,72	169,9
MTW	20,76	45,779	254,28	192,09
STW	81,66	66,21	88,7	220,2
TW	40,78	78,56	256,9	415

Table 5: Maximum force for each category

	Maximum	StDev of maximum
UTM	233,76	82,23
MTM	260,37	122,96
STM	279,12	118,43
TM	612,7	202,9
UTW	169,9	33,87
MTW	192,09	31,21
STW	220,2	39,3
TW	415	223,6

CONCLUSION

In this long-term research, the direct punch force profiles of more than 200 participants were measured using strain gauge and complex measuring station. The results were afterward processed and analyzed using the MINITAB.

Our goal was to measure force profile for direct punch and then to find out the dependencies on inputs parameters. In the next step of our research we analyzed data with help of statistical analysis.

For future research the maximum force was selected as a suitable classifier from statistical data analysis. In graphs we can see that there are differences between training levels for each gender. Therefore it is expected that direct punch would be able to distinguish with the respect to gender and training level with help of the artificial neural network.

In the future, authors would like to measure other striking techniques used in professional defence and to compare them with direct punch results. The simulations for recognition of striking techniques with help of artificial neural network in the view of gender and training level will be performed too.

ACKNOWLEDGEMENT

This work was supported by financial support of research project NPU I No. MSMT-7778/2014 by the Ministry of Education of the Czech Republic and by the European Regional Development Fund under the Project CEBIA-Tech No. CZ.1.05/2.1.00/03.0089.

REFERENCES

Blower G.: Boxing: Training, Skills and Techniques. Crowood, 2007.

Bolander, R.P., Neto, O.P., A. Bir, C.: The effects of height and distance on the force production and acceleration in martial arts strikes. Journal of Sports Science and Medicine [online]. 2009, roč. 8, s. 47-52 [cit. 2012-06-27]. Available: http://www.jssm.org/combat/3/9/v8combat3-9.pdf

Fausett L. V.: Fundamentals of Neural Networks: Architectures, Algorithms and Applications, Prentice Hall, 1993, ISBN: 9780133341867

Gianino C.: Physics of Karate: Kinematics analysis of karate techniques by a digital movie camera. Latin-American Journal of Physics Education, 2010, 4.1: 5.

Gurney K.: An Introduction to Neural Networks, CRC Press, 1997, ISBN: 1857285034

Hertz J., Kogh A. and Palmer R. G.: Introduction to the Theory of Neural Computation, Addison – Wesley 1991

Lapkova D. and Adamek M. (2014 a): Analysis of Direct Punch with a View to Velocity. In Proceedings of teh 2014 International conference on Applied Mathematics, Computational Science and Engineering. Craiova : Europment, 2014, s. 0-9. ISSN 2227-4588. ISBN 978-1-61804-246-0.

Lapkova D., Pospisilik M., Adamek M. and Malanik Z.: The utilisation of an impulse of force in self-defence. In: XX IMEKO World Congress: Metrology for Green Growth.Busan, Republic of Korea, 2012, ISBN: 978-89-950000-5-2.

Lapkova, D., Pluhacek, M., Adamek, M. (2014 b): Computer Aided Analysis of Direct Punch Force Using the Tensometric Sensor. In: Modern Trends and Techniques in Computer Science: 3rd Computer Science On-line Conference 2014 (CSOC 2014). Springer, 2014, s. 507-514. ISBN 978-3-319-06739-1.ISSN 2194-5357.

Lapkova, D., Pluhacek, M., Kominkova Oplatkova, Z. And Adamek, M. (2014 c): USING ARTIFICIAL NEURAL NETWORK FOR THE KICK TECHNIQUES CLASSIFICATION – AN INITIAL STUDY. In: Proceedings 28th European Conference on Modelling and Simulation ECMS 2014. Germany: Digitaldruck Pirrot GmbH, 2014, s. 382-387. ISBN 978-0-9564944-8-1.

Lapkova, D., Pluhacek, M., Kominkova Oplatkova, Z., Senkerik, R., Adamek, M. (2014 d): Application of Neural Networks for the Classification of Gender from Kick Force Profile – A Small Scale Study. In: Proceedings of the Fifth International Conference on Innovations in Bio-Inspired Computing and Applications IBICA 2014. Springer International Publishing, 2014, s. 429-438. ISBN 978-3-319-08155-7ISSN 2194-5357

Levine D. and Whitman J.: Complete Krav Maga. 2007.

Pieter, F. and Pieter W.: Speed and force in selected taekwondo techniques. Biology of sport 12, 1995, 257-266.

Wasserman P. D.: Neural Computing: Theory and Practice, Coriolis Group, 1980, ISBN: 0442207433

AUTHOR BIOGRAPHY

DORA LAPKOVA was born in the Czech Republic, and went to the Tomas Bata University in Zlin, where she studied Security Technologies, Systems and Management and obtained her MSc degree in 2009. She is now a Ph.D. student at the same university. Her email address is: dlapkova@fai.utb.cz.