SCHOTTKY DIODE REPLACEMENT BY TRANSISTORS: SIMULATION AND MEASURED RESULTS

Martin Pospisilik
Department of Computer and Communication Systems
Faculty of Applied Informatics
Tomas Bata University in Zlin
760 05, Zlin, Czech Republic
E-mail: pospisilik@fai.utb.cz

KEYWORDS
Model, SPICE, MOSFET, Electronic Diode, Voltage Drop, Power Dissipation

ABSTRACT

The software support for simulation of electrical circuits has been developed for more than sixty years. Currently, the standard tools for simulation of analogous circuits are the simulators based on the open source package Simulation Program with Integrated Circuit Emphasis generally known as SPICE (Biolek 2003). There are many different applications that provide graphical interface and extended functionalities on the basis of SPICE or, at least, using SPICE models of electronic devices. The author of this paper performed a simulation of a circuit that acts as an electronic diode in Multisim and provides a comparison of the simulation results with the results obtained from measurements on the real circuit.

INTRODUCTION

For the first time, Simulation Program with Integrated Circuit Emphasis (SPICE) was released in 1973 as a general-purpose, open source analog electronic circuit simulator. It was intended to check the integrity of circuit designs on the board-level and to predict the circuit behaviour in time (Vladimirescu 1994). In 2011 the development of SPICE has been named and IEEE Milestone (Bogdanowicz 2011).

To process the simulation, the devices of the simulated circuit must be defined in the form of the set of parameters. These parameters can be set manually, or, obtained from the manufacturers of the devices. The simulation itself is based on numerical methods and its complexity exceeds the framework of this paper.

The author has chosen the application Multisim, released by National Instruments, that employs SPICE models and algorithms, but provides graphical interface and a wide variety of device libraries. The aim was to provide a comparison of results obtained by means of simulation with the results measured on the real circuit.

MOTIVATION

The expansion of metal oxide field effect transistors has led to efforts to substitute conventional diodes by electronic circuit that behave in the same way as the diodes, but show considerably lower power dissipation as the voltage drop over the transistor can be eliminated to very low levels. In Fig. 1 there is a block diagram of a backup power source for the devices that use Power over Ethernet technology. This solution, that has been developed at Tomas Bata University in Zlin, enables immediate switching from the main supply to the backup one together with gentle charging of the accumulator, unlike the conventional on-line uninterruptable power sources do (Pospisilik and Neumann 2013).

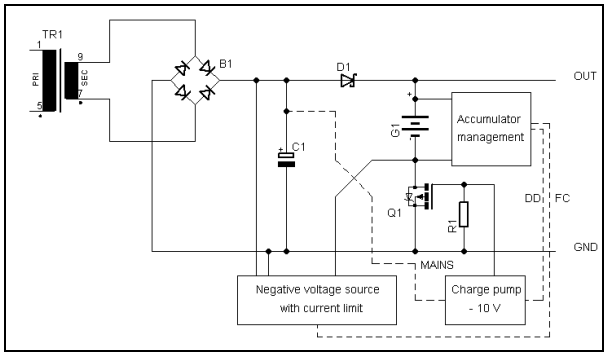

Figure 1: Simplified Block Diagram of the Backup Power Source for Power over Ethernet Devices

When the power supply network fails, the Charge pump is activated. This results in opening of the Q1 transistor. Now the output is fed by the accumulator and the Negative voltage source is decommissioned, being blocked by the Schottky diode D1.Once the supply network starts to be active again, the Charge pump is switched off and the transistor Q1 is closed as its gate charge is distracted by the R1 resistor. The Negative voltage source is fed from the rectifier B1, delivering controlled charging voltage drop at the currents around 6 A is expected to be as high as 1 to 1.2 V, resulting in the power dissipation of up to 7.2 W. Therefore there was a need to find a simple and stable solution that would be implementable on a small area of the printed circuit board, ideally by means of surface mounted

Proceedings 30th European Conference on Modelling and Simulation ©ECMS Thorsten Claus, Frank Herrmann, Michael Manitz, Oliver Rose (Editors)
ISBN: 978-0-9932440-2-5 / ISBN: 978-0-9932440-3-2 (CD)

devices, not needing any other heatsink than the copper on the board. As the solution, a functional sample of a circuit employing a transistor instead of the diode has been created and its behaviour was simulated and tested.

The principle of replacement of the Schottky diode with the metal oxide field effect transistor (MOSFET) is depicted in Fig. 2. If the P-channel MOSFET is used, the current flows in the direction from the drain (D) to the source (S) of the transistor. At the voltages lower than the threshold voltage between the gate (G) and the source of the transistor (S) the current flows through the internal protective diode. When the voltage is increased and the voltage difference between the source and the gate of the transistor is higher than its threshold voltage, the transistor is turned to the ON state and its conductivity is increased significantly. Once the polarity of the power source is alternated, the transistor does not lead any current at all. However, the maximum voltage difference between the gate and the source of the transistor is limited and therefore in practical solutions the circuit cannot be as simple as depicted in Fig. 2.

Thanks to the fact that there is the Negative voltage source equipped with a current limiter connected in series with the accumulator, the voltage and current stresses to the accumulator are considerably limited. The bottleneck of this solution is the Schottky diode D1. Its expected

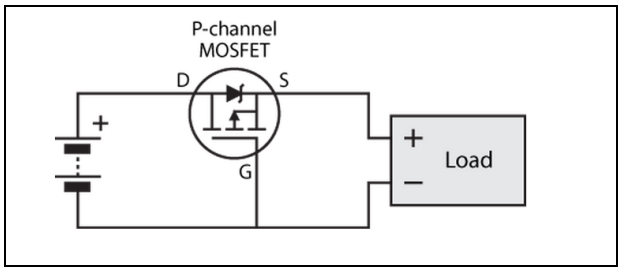

Figure 2: Replacement of a Diode by P-channel MOSFET

CIRCUIT DESIGN

The diagram of the circuit that can replace the Schottky diode D1 depicted in Fig. 1 can be found in Fig. 3. The principle of the operation of the circuit is as follows: When there is a power source connected to the pads P1 and P2 and the voltage on P2 is higher than the voltage on P1, the current starts to flow through the internal diode of the transistor Q1 to the load that is connected between pads P3 and P4. The voltage drop at this diode and at the diode D2 is high enough to open the transistor T2 that drives the transistor T1. As the transistor T1 starts to conduct the current, a voltage drop is created on the resistor R1, resulting in generation of the sufficient gate-to-source voltage on the transistor Q1. At this moment, the transistor Q1 is opened, exhibiting a good conductivity. Now the voltage drop over the transistor is very low which leads to pinching of transistor T2 and the transistor T1 respectively. This effect helps to keep the gate-to-source voltage of the transistor T1 at the appropriate level at various input voltages.

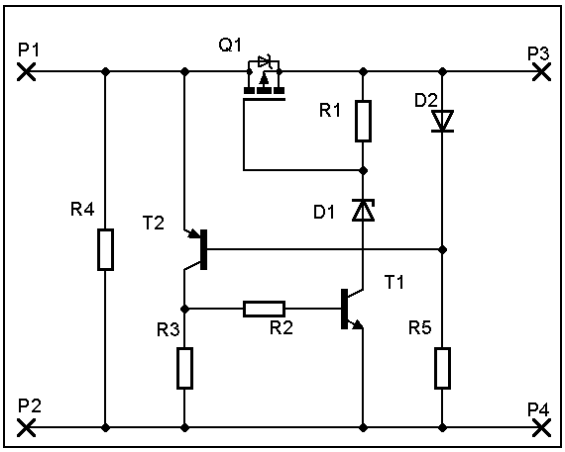

Figure 3: The Circuit Replacing the Schottky Diode D1 in Fig. 1

The description of the devices used in the circuit is provided in Table 1.

Table 1: Elements of the circuit depicted in Fig. 3

Element	Description
R1	100 kΩ, metal oxide resistor
R2	1 kΩ, metal oxide resistor
R3	47 kΩ, metal oxide resistor
R4	330 kΩ, metal oxide resistor
R5	10 kΩ, metal oxide resistor
D1	Zener diode 12 V, BZX55C12
D2	Diode, 1N4001
T1	NPN transistor, BC547
T2	PNP transistor, BC557
Q1	MOSFET, IRF9Z34N

SIMULATION

The simulation was performed in Multisim 12 according to the model depicted in Fig. 4. As can be seen, the values of resistors have been set according to Table 1 and their tolerances have been set to 1 %. The semiconductors D1, D2, Q2 and Q3 have been chosen from the software's library. The model of the transistor Q1 was implemented according to the information provided by its producer. This model is shown in Table 2.

For the purposes of simulation, the circuit was loaded with an adjustable current source I1 whereas the source of energy for the circuit was simulated as a pre-settable piecewise linear voltage source V1.

Different kinds of simulation of the circuit has been performed as described in the subchapters below.

Table 2: Spice model of the transistor Q1 (Vishay 2010)

```
*Mar 30, 2010 *Doc. ID: 90320, Rev. A
*File Name: part irf9z34n_sihf9z34n_PS.txt and part
irf9z34n_sihf9z34n_PS.spi
*This document is intended as a SPICE modeling guideline and does
*not constitute a commercial product datasheet. Designers should
*refer to the appropriate data sheet of the same number for
* guaranteed specification limits.
.SUBCKT irf9z34n 1 2 3
**************************************
* Model Generated by MODPEX *
*Copyright(c) Symmetry Design Systems*
* All Rights Reserved *
* UNPUBLISHED LICENSED SOFTWARE *
* Contains Proprietary Information *
* Which is The Property of *
* SYMMETRY OR ITS LICENSORS *
*Commercial Use or Resale Restricted *
* by Symmetry License Agreement *
**************************************
* Model generated on Apr 12, 99
* MODEL FORMAT: SPICE3
* Symmetry POWER MOS Model (Version 1.0)
 * External Node Designations
* Node 1 -> Drain
* Node 2 -> Gate
* Node 3 -> Source
M1 9 7 8 8 MM L=100u W=100u
* Default values used in MM:
* The voltage-dependent capacitances are
* not included. Other default values are:
* RS=0 RD=0 LD=0 CBD=0 CBS=0 CGBO=0
.MODEL MM PMOS LEVEL=1 IS=1e-32
+VTO=-3.18176 LAMBDA=0 KP=2.52466
+CGSO=4.9266e-06 CGDO=1e-11
RS 8 3 0.0001
D1 1 3 MD
.MODEL MD D IS=2.51148e-12 RS=0.0124373 N=1.05244 BV=55
+IBV=0.00025 EG=1 XTI=2.91741 TT=0.0001
+CJO=4.87958e-10 VJ=5 M=0.731488 FC=0.5
RDS 3 1 1e+06
RD 9 1 0.028942
RG 2 7 6
D2 5 4 MD1
* Default values used in MD1:
* RS=0 EG=1.11 XTI=3.0 TT=0
* BV=infinite IBV=1mA
.MODEL MD1 D IS=1e-32 N=50
+CJO=8.50824e-10 VJ=0.5 M=0.456256 FC=1e-08
D3 5 0 MD2
* Default values used in MD2:
* EG=1.11 XTI=3.0 TT=0 CJO=0
* BV=infinite IBV=1mA
.MODEL MD2 D IS=1e-10 N=0.4 RS=3e-06
RL 5 10 1
FI2 7 9 VFI2 -1
VFI2 4 0 0
EV16 10 0 9 7 1
CAP 11 10 8.50824e-10
FI1 7 9 VFI1 -1
VFI1 11 6 0
RCAP 6 10 1
D4 6 0 MD3
* Default values used in MD3:
* EG=1.11 XTI=3.0 TT=0 CJO=0
* RS=0 BV=infinite IBV=1mA
.MODEL MD3 D IS=1e-10 N=0.4
.ENDS irf9z34n
```

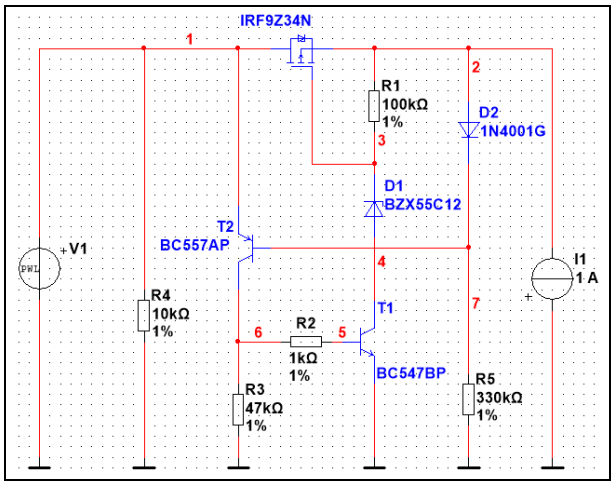

Figure 4: Simulation Schematics of the Circuit Created in Multisim 12

Voltage Drop at Different Loads

In the next step, the voltage drop between the input and the output of the circuit has been simulated for different output loads and different input voltage. For this purpose, the PWL source (V1) was set to increase its voltage from 0 to 30 V in the period from 0 to 1 s and transient analysis of the circuit was performed repeatedly for different settings of the current source I1.

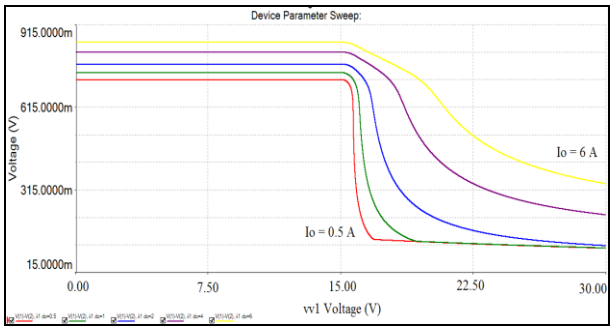

Figure 6: Voltage Drop over the Circuit Versus the Load Current

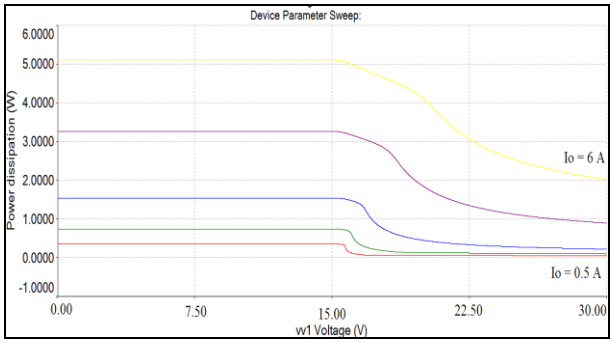

Figure 7: Calculated Power Dissipation on the Transistor Q1

The Parameter sweep simulation has been used to perform this in one step. In the graph that is depicted in Fig. 6 there are the output results for the load currents 0.5, 1, 2, 4 and 6 A. The output results consist in the difference between the input and the output voltage of the circuit (e.g. the voltage drop).

The power dissipation on the transistor Q1 can also be obtained directly by the simulation as depicted in Fig. 7.

Rectification at 50 Hz

The behavior of the circuit used as a rectifier operating at standard 50 Hz frequency has always been simulated. The modification of the simulation schematics was done as depicted in Fig. 8. The power source was replaced by a standard AC power source with the output voltage of 20 V_{RMS} and the frequency of 50 Hz. The circuit was loaded by a combination of a 4 Ω resistor and 47 mF capacitor in parallel. The internal impedance of the AC power source was set to 30 mΩ.

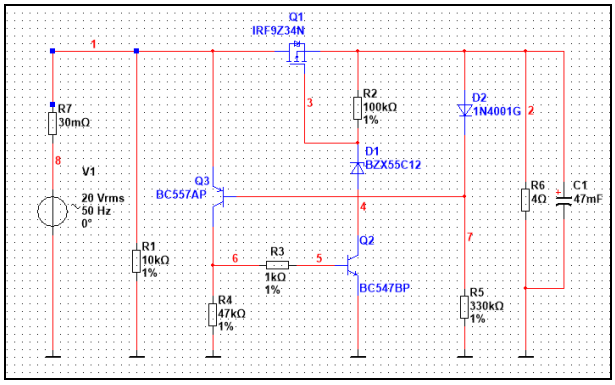

Figure 8: Simulation Schema for the Circuit Used as a Rectifier

This situation simulates the operation of a one-way rectifier connected to a transformer with a low output impedance. The waveforms simulated in the nodes 1 and 2 can be found in Fig. 9.

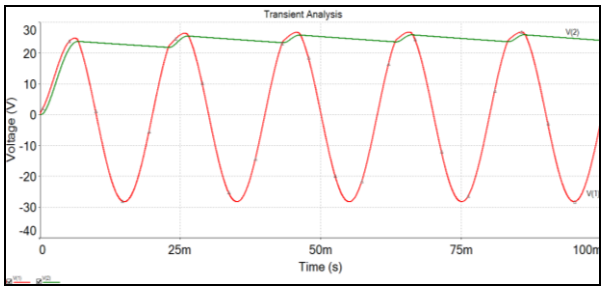

Figure 9: Waveforms at the Input and the Output of the Circuit When It Is Used as a 50 Hz Rectifier

RESULTS OBTAINED BY MEASUREMENT

In order to prove the results obtained by simulation, a functional sample of the circuit has been constructed and its behavior has been tested by means of the following laboratory equipment:

- Programmable power source Picotest P9611A,
- Electronic load Array 3721,
- Digital oscilloscope Hameg HMO722,
- RMS Multimeter UNI-T UT803,
- Multimeter Voltcraft VC820.

The configuration of the experiment was made according to the scheme depicted in Fig. 10.

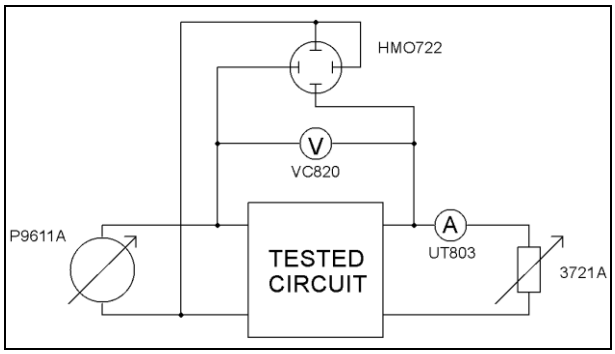

Figure 10: Experiment Setup

Considering the capabilities of the equipment, only DC characteristics of the electronic diode circuit have been measured.

From the measurements that have been obtained, measurement of the voltage drop over the circuit at different loads was the most interesting one. The voltage of the power source has been increased from 0 to 25 V with the step of 1 V and the electronic load was sequentially set to a constant current of 0.5, 1, 2, 4 and 6 A. The voltage drop over the circuit was measured by the voltmeter VC820 and the stability of the DC voltage at the input as well as at the output of the circuit was monitored by the oscilloscope HMO720. The output current was monitored by the multimeter UT803.

The results of the measurement can be found in Fig. 11.

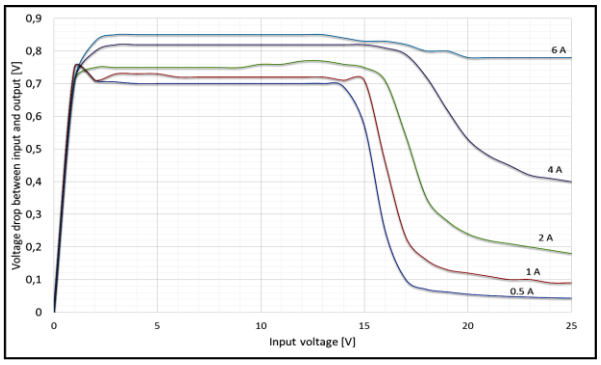

Figure 11: Measured Voltage Drop Over the Circuit at Different Current Loads

The findings resulting from the experimental measurement can be compared to the results of simulation of the same operating conditions of the circuit that are depicted in Fig. 6. For low currents the measured results correspond to the results obtained by the simulation. However, at higher currents the results obtained by the simulation were not correct. It is expected, that the increased voltage drop, obtained by the real experiment, has been partially caused by the resistance of the connecting wires as well as by the resistance of the PCB traces. At the current of 6 A and the input voltage of 22.5 V, considering the voltage drop over the current, the difference between the simulation and the measurement was as high as 0.3 V, which corresponds to the traces' resistance of about 50 mΩ.

CONCLUSIONS

In this paper the construction of the circuit that replaces a conventional Schottky diode is described together with the results of simulations that were made in order to verify the circuit's design before it was constructed as well as with the results obtained by measurement on the functional sample of this circuit. It was proven that the circuit operates correctly and the achieved results were close to the simulated behavior of the circuit with the exception of high current loads. When the circuit was loaded with high currents, the voltage drop over it was considerably higher than simulated.

Acknowledgements

This work was supported by the Ministry of Education, Youth and Sports of the Czech Republic within the National Sustainability Programme project No. LO1303 (MSMT-7778/2014).

REFERENCES

Biolek, D. 2003. *Solving of electrical circuits [Resime elektronicke obvody]*. BEN – Technicka literatura. ISBN 80-7300-125-X.

Vladimirescu, A. 1994. *The SPICE book*. John Willey & Sons. ISBN 978-0471609261.

Bogdanowicz, A. 2011. "SPICE Circuit Simulator Named IEEE Milestone". *The institute*. IEEE.

Pospisilik, M., Neumann, P. 2013. "Improved Design of the Uninterruptable Power Supply Unit for Powering of Network Devices". In *19th IEEE International Symposium on Design and Diagnostics of Electrical Circuits*. Karlovy Vary, Czech Republic. ISBN 978-1-4673-6133-0.

Vishay. 2010. *IRF9Z34 SPICE model*. Online: http://www.vishay.com/docs/90320/sihf9z34.lib

AUTHOR BIOGRAPHY

MARTIN POSPISILIK was born in Přílepy, Czech Republic. He reached his master degree at the Czech Technical University in Prague in the field of Microelectronics in 2008. Since 2013, after finishing his Ph.D. work focused on a construction of the Autonomous monitoring system, he became an assistant professor at the Tomas Bata University in Zlin, focused on communication systems and electromagnetic compatibility of electronic components. His e-mail is: `pospisilik@fai.utb.cz`