STRUCTURAL ANALYSIS ON LIGHTWEIGTH EXCAVATOR ARMS

Luigi Solazzi
Federico Ceresoli
Michele Cima
Dipartimento di Ingegeneria Meccanica e Industriale
Università degli Studi di Brescia
Via Branze 38, Brescia 25123, Italy
luigi.solazzi@unibs.it
f.ceresoli002@unibs.it
cima.michele@gmail.com

KEYWORDS
Ligthweigth, excavator, structural analyses, load condition, movement law, buckling phenomena, weigth optimization, design with alluminium alloy.

ABSTRACT

The present work concerns the study of a new type of excavator considering the hydraulic arms and cylinders made of aluminum instead of the classic construction steel. The work after a first geometric evaluation of the machines on the market is realized on a machine, estimating the real geometry with which the arms are made. The most probable working conditions to which the excavator is subjected during the life cycle of the machine are studied and imployed into calculation software both to determine the dynamic actions generated by the movement and to estimate the values of the stresses, displacements and relative instability coefficients. This study is carried out both for the original steel solution and for the innovative aluminum solution. Finally the safety coefficients are estimated assuming that the cycles to which the excavator is subjected are equal to 2 * 10 ^ 6. From the analysis it emerges that the solution is absolutely constructively implementable and achievable allowing a total weight reduction (cylinder and arms) of about 65% thus allowing either an increase in the flow rate or even a reduction in the performance of the hydraulic system present on the machine.

DESCRIPTION OF THE MACHINE

The machine at the base of this study is a commercial excavator produced by the CAT company whose acronym is 336F. This machine has a motor with a power of 234 kW and an operating weight of 40800 kg. The main dimensions of the excavator are shown in Figure 1 while in Figure 2 there is also a diagram relative to the excavator working area.
The machine is equipped with two arms. The first one close to the control cabin and the axis of rotation of the machine has a length of 6.9 m while the second arm, the stick, the one to which the bucket is attached, has a length of 3.9 m.

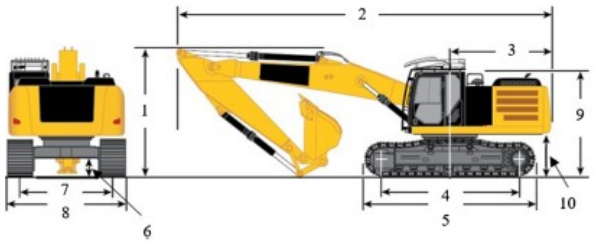

1	2	3	4	5	6	7	8	9	10
3.7	11.4	3.5	4.0	5.0	0.5	2.6	3.2	3.5	1.2

Figure 1: Excavator dimension [m]

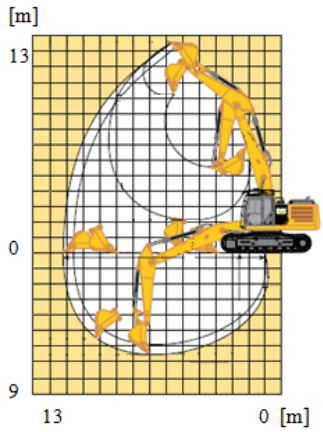

Figure 2: Excavation diagram

DEFINITION OF LOAD CONDITIONS

An excavator during the life cycle is subjected to several load conditions, for example the load conditions of an excavator used in a marble quarry are different from those of a one used in a construction site or used in the field of civil demolition where there is a clamp in place of the bucket. It is important to underline that the use of the excavator can vary during the life of the machine. Given this variability and in the absence of specific information and because the study is a comparative study between different structural solutions, it was decided to adopt two loading conditions, in order to simulate the loading phase of a trailer. To do this the loading conditions considered are

Communications of the ECMS, Volume 33, Issue 1,
Proceedings, ©ECMS Mauro Iacono, Francesco Palmieri,
Marco Gribaudo, Massimo Ficco (Editors)
ISBN: 978-3-937436-65-4/978-3-937436-66-1(CD) ISSN 2522-2414

the leveling Figure 3 and the lifting at the minimum distance Figure 4.

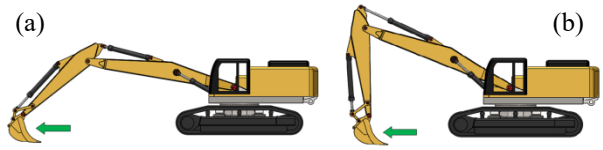

Figure 3: Condition of levelling (a) start, (b) stop

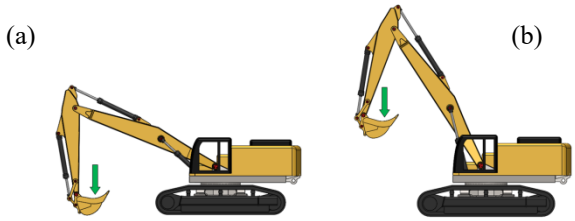

Figure 4: Condition of lifting at minimum distance (a) start, (b) stop

NUMERICAL SIMULATIONS OF LOAD CONDITIONS

The real actions that act on the structure of the excavator are given by the load that the excavator has to move to which also the dynamic actions must be added. These actions depend both on the speed and on the acceleration of the movements and on the structure that moves the load (Bošnjak et al. 2012), (Solazzi et al. 2014) and (Zrnié 2015). These actions have been estimated using the SolidWorks software by imposing a horizontal translation speed of the bucket (load contion 1) equal to 1m/s and in the vertical direction (load condition 2) equal to 8°/s (Vujic et al. 2017), (Winck et al.2015). These values derive both from experimental analyzes on a similar excavator and from the performance evaluation of the hydraulic system on board the excavator under study. The simulated movement is shown in Figure 5 while Figure 6 and 7 show the acceleration trends in absolute value and in vertical direction present at the bucket attachment point.

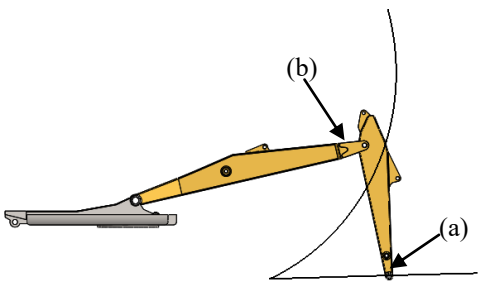

Figure 5: Movement simulation

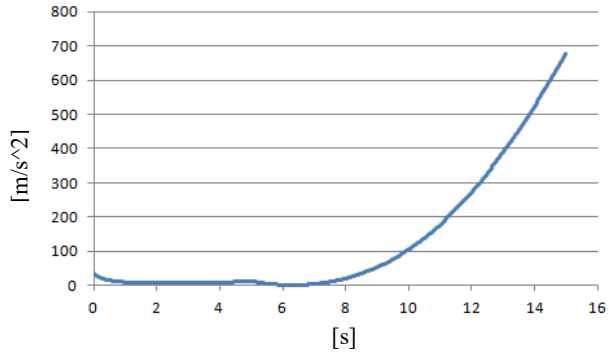

Figure 6: Trend of the acceleration module (point a)

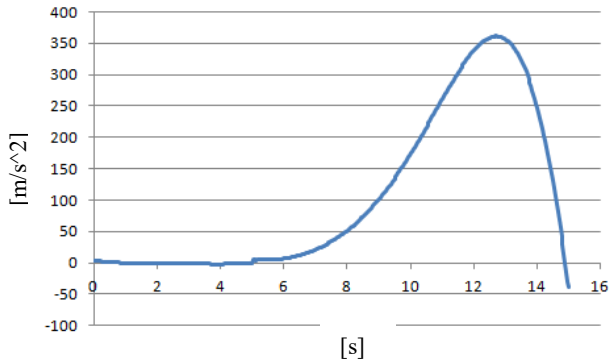

Figura 7: Trend of the acceleration in vertical direction (point a)

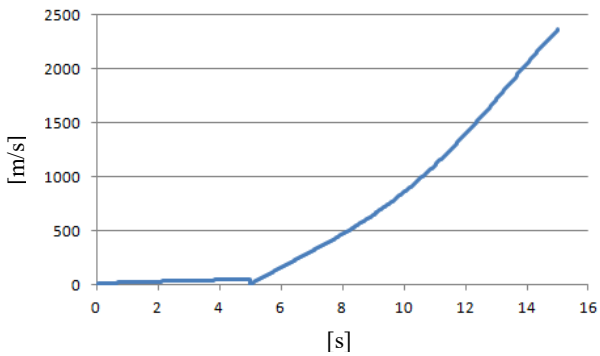

Figure 8: Trend of velocity module (point a)

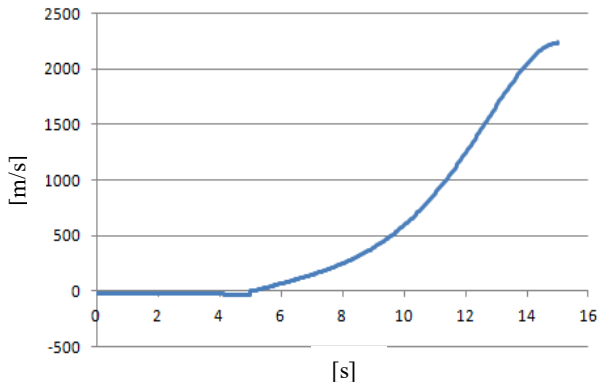

Figure 9: Trend of velocity in vertical direction (point a)

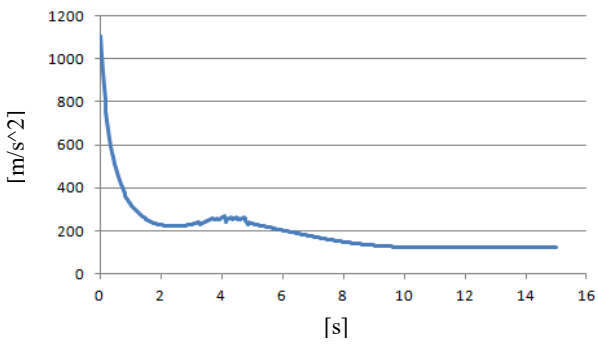

Figure 10: Trend of the acceleration module (point b)

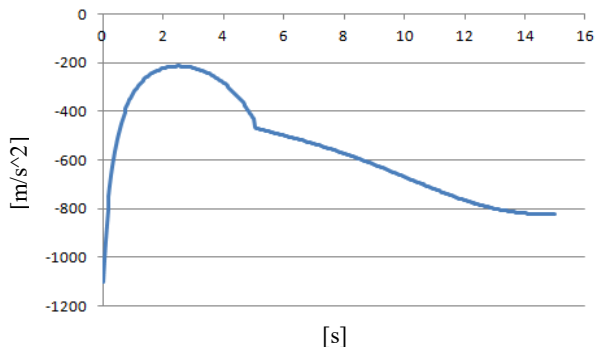

Figure 11: Trend of the acceleration in vertical direction (point b)

DETERMINATION OF SOLLECITATIONS

The aim of this work is also to design the two excavator arms in order to lighten the structure in order to maintain the same safety coefficients (Solazzi 2011). For this reason, materials generally not used in the field of earth moving machine have been chosen (Miscia 2015), (Solazzi 2010), (Solazzi and Scalmana 2012) and (Solazzi 2018). So in order to have a new machine with the same performance as the original configuration using light alloy such as alluminum alloy, it is essential that it has at least similar coefficients with respect to the ratio between the permissible strees and maximum stress present in the component, in other words, a similar value with respect to the static safety coefficient. Another criterion adopted was the evaluation of the maximum deformation of the structure which must be very similar for the different structural solutions designed and in all the load conditions implemented. Another important aspect considered during the dimensioning of the various elements is related to the buckling phenomena. The following formula refers to a plate subjected to a compressive force.

$$F_{cr} = \frac{\pi^2}{a^2} \cdot \frac{1}{(1-\nu^2)} \cdot \frac{1}{12} b S^3 \qquad (1)$$

b=width
S=thickness
a=length

The adopted criteria for the design of new structural solutions for the arms are the following:

$$\left.\frac{\sigma_{limit}}{\sigma_{max}}\right|_{S\_355} \cong \left.\frac{\sigma_{limit}}{\sigma_{max}}\right|_{Al\_6063} \qquad (2)$$

σ_{limit}= the limit value is the tensile yield strength σ_{sn}.

$$\left.\frac{F_{crt}}{F_{max}}\right|_{S\_355} \cong \left.\frac{F_{crt}}{F_{max}}\right|_{Al\_6063} \qquad (3)$$

F_{crt}= critical load of instability.

$$\delta_{max}|_{S\_355} \cong \delta_{max}|_{Al\_6063} \qquad (4)$$

δ_{max}= maximum displacement present in the structure.

Specification of the material and determination of the safety coefficient

For the construction of the excavator in its original configuration, the use of the classic S355 UNI EN 10025-3 construction steel was assumed. For the optimized/lightened solution (Mallick 2010), we thought of the use of a light alloy or the 6063T6 UNI EN573-3 aluminum alloy as it presents a good compromise between costs and performance (Gouveia and Silva 2017), (Solazzi 2012) and (Solazzi et al. 2017). Table 1 shows the characteristics of the materials used for the study and design of the excavator arms in question.

Table 1: characteristics of the materials considered

Material	Density ρ [kg/m^3]	Young modulus E [MPa]	Poisson ratio ν	σ_y [MPa]	σ_R [MPa]
S355	780	210000	0.28	355	510
6063T6	270	69000	0.33	215	221

Determination of the stresses by analytical way

To determine the stress present during load conditions and to define the thickness/dimensions of the 6063T6 light alloy solution Figure 12, it was decided to identify three different sections for the boom Figure 13 and two sections for the stick Figure14.

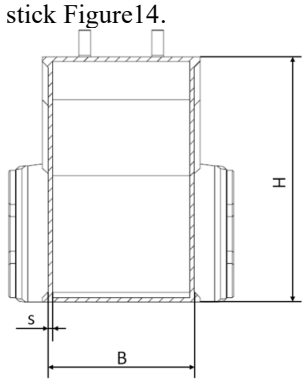

Figure 12: Arms section

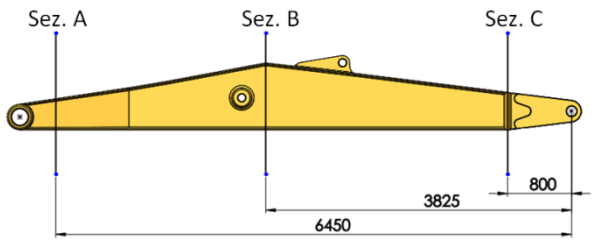

Figure 13: Position of the sections for the boom

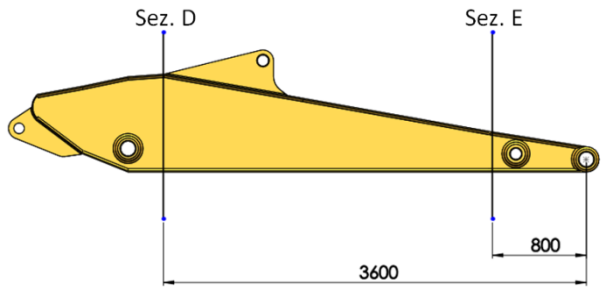

Figure 14: Position of the sections for the stick

Table 2 shows the values of the stresses and of the geometrical characteristics present in the arms considering the load condition related to the lifting at the minimum distance Figure 4.

Table 2: Size of the sections and relative stress present during the lifting condition at the minimum distance for S355 and 6063T6

S355	B [mm]	H [mm]	S [mm]	σ_{VM} [MPa]
Sez. A	500	360	25	50.5
Sez. B	500	850	25	33.0
Sez. C	500	485	25	28.3
Sez. D	500	850	25	30.6
Sez. E	500	360	25	38.1

Al 6063T6	B [mm]	H [mm]	S [mm]	σ_{VM} [MPa]
Sez. A	500	600	25	75.2
Sez. B	500	1000	25	26.4
Sez. C	500	570	25	23.7
Sez. D	500	1000	25	30.5
Sez. E	500	450	25	31.8

Evaluation of the stresses present in the arms

Being a complex geometry, after a first estimate of the section by analytical way, it was necessary to realize the solid models of the structure and then perform the numerical analyzes using the finite element calculation technique. The software used is Autodesk Simulation Mechanical and in general for both solutions (steel S355 and aluminum 6063T6) the calculation model is composed of 30000 elements for the boom and of 20000 elements for the stick (Bofang 2018) and (Jonathan 2017). In order to make a correct modeling, both the excavator frame and the hydraulic cylinders for actuating the arms were simulated, as shown in Figure 14.

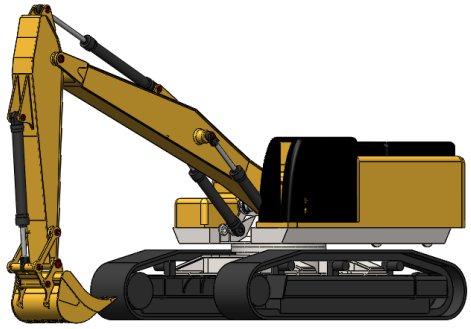

Figure 15: Complete excavator

The results presented below refer to the stresses Figure 16 and to the displacement Figure 17 caused during the lifting phase at the minimum distance for the boom (in S355 and in Al 6063T6) and for the stick (in S355 and in 6063T6) Figure 18 e Figure 19.

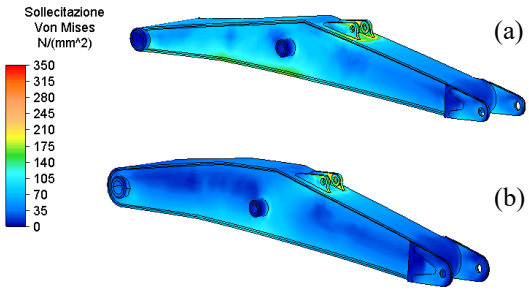

Figure 16: Stress in the boom for lifting at the minimum distance (a) S355, (b) 6063T6

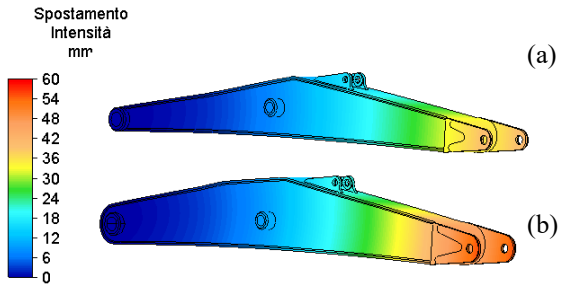

Figure 17: Displacment in the boom by lifting at the minimum distance (a) S355, (b) 6063T6

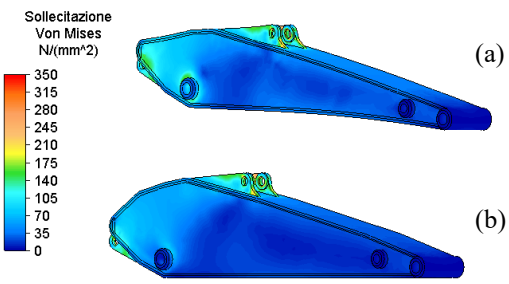

Figure 18: Stress in the stick for lifting at the minimum distance (a) S355, (b) 6063T6

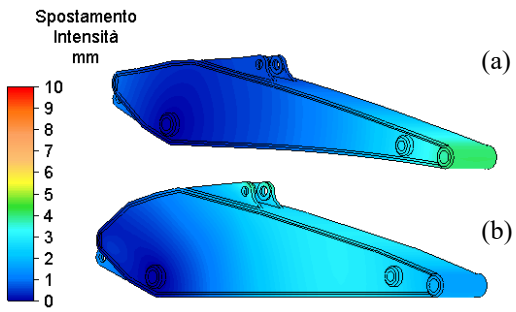

Figure 19: Displacment in the stick by lifting at the minimum distance (a) S355, (b) 6063T6

Figure 20 shows the stresses present during the leveling phase (load condition 1) both for the solution in S355 and in 6063T6 light alloy.

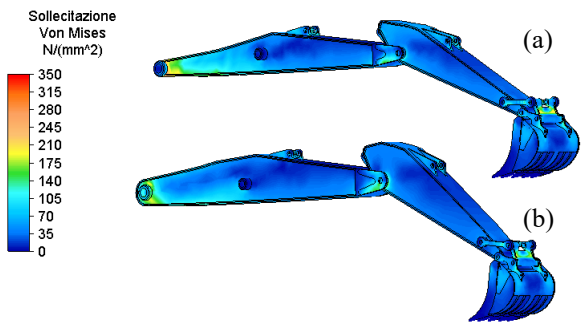

Figure 20: Stress in the arm assembly for the levelling condition (a) S355, (b) 6063T6

Evaluation of the instability coefficients

Through the numerical models, in addition to the evaluation of both the stresses and the deformations present in the arms, we proceeded to determine the instability coefficients for the two materials adopted (Eslami 2018), (Björn 2007), (Falzon and Aliabadi 2008) and (Tomasz 2013). Figures 17 and 18 show the deformed arms in S355. The buckling valuess are shown in Table 3.

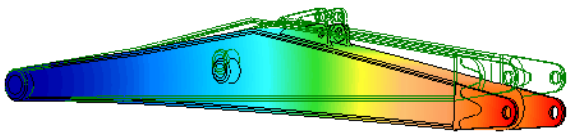

Figura 21: First buckling phenomena boom S355

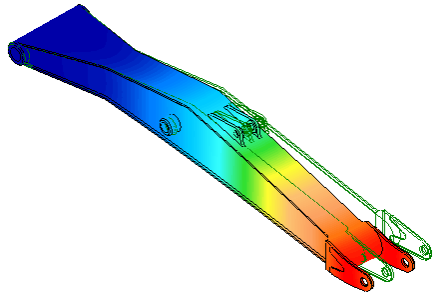

Figura 22: Second buckling phenomena boom S355

Table 3: First two minimum values of buckling phenomena for two materials

Material		
S355	1.15	1.48
Al 6063T6	1.34	1.45

EVALUATION OF FATIGUE LIFE

In general these machines are used for many years and therefore are subject to numerous stress cycles. For this reason, a work cycle consisting of a bucket filling phase is assumed through the load condition called leveling (Figure 3) and lifting phase of material that can be identified by the load condition of lifting at the minimum distance (Figure 4). Through this combination of load condition it is possible to reproduce the load sequence of a trailer. From the numerical analyzes we have obtained the values of stresses present in the various sections of the arms. In particular, the check is carried out in the points most stressed for sections B and D in Figure 13 and 14. These values are shown in table 4. It also shows the preliminary estimate of the safety factor considering the limit value for the material adopting $2x10^6$ cycles.

Table 4: Fatigue safety coefficient estimation

Material	Sez. B LC1	Sez. B LC2	Sez. D LC1	Sez. D LC2	η min
S355	25.7	40.4	16.9	32.8	5.05
Al 6063T6	16.7	21.4	12.5	18.3	4.13

CONCLUSIONS/RESULTS/DEVELOPMENTS

As can be seen from the results obtained from the simulations Figure 16-20, these are comparable with those obtained by the arms of an excavator made of non-conventional material such as 6063T6 aluminum alloy, guaranteeing the same characteristics of the S355 construction steel. This was possible because the geometry and dimensions of the box sections that make up the arms of the excavator have been modified, trying to mantain the same safety coefficients both with respect to the stresses and to the displacement. The use of a light alloy guaranteeing a reduction in the weights Table 5vof the components under examination thus guaranteeing either a possible increase of the transportable mass for the same components or a

reduction in the power of the propulsive and oleodynamic system of the machinery reducing the costs and the impact environmental. It should be noted that the production of the aluminum alloy arms leads to an increase in production costs, but this increase can be limited by the increse of the hourly production thanks to the increasing of the transportable mass or by the reduction of costs linked to a propulsion and oli pumping system with lower performance. This study was based on two load conditions: levelling and lifting at the minimum distance, the aim is to conduct this study considering and investigating other load condition and their different combinations so as to be able to recreate as much as possible the real uses of the excavator. Other developments will also be linked to the the use of different materials such as composite mateials based on carbon fibers for the construction of the arms, but also other components that make up the excavator itself.

Table 5: Reduction of the mass of the arms and increase of the transportable mass

Material	Mass reduction boom, stick and hydraulic cylinders [%]
Al 6063T6	67.2

REFERENCES

Björn Åkesson: Plate Buckling in Bridges and other Structures ISBN: 978-0-415-43195-8 Taylor & Francis Group (2007)

Bofang Z. The finite Element Method : fundamentals and Applications in Civil, Hydraulic, Mechanical and Aeronautical Engineering. 1st Editio. Wiley; 2018.

Bošnjak, S.M., Zrnić, N.D., Gašić, V.M., Petković, Z.D., Milovančević, M.D.: Dynamic responses of mobile elevating work platform and mega container crane structures, Volume 562-564, 2012, Pages 1539-1543, International Conference on Materials Engineering and Automatic Control, ICMEAC 2012; Jinan; China 27 April 2012 through 29 April 2012; Code 92998 ISBN: 978- 303785458-7

Eslami MR. Buckling and Postbuckling of Beams, Plates, and Shells. 1st Editio. Springer International Publishing; 2018.

Falzon B G, Aliabadi M H. Computational and Experimental Methods in Structures Buckling and Postbuckling Structures Experimental, Analytical and Numerical Studies. 1st Editio. Imperial College Press; 2008.

Gouveia RM, Silva FJG. Designing a new Sustainable Approach to the Change for Lightweight Materials in Structural Components Used in Truck Industry. J Clean Prod 2017:115–23.

Jonathan W. Finite Element Methods A Practical Guide. 1st Editio. Springer International Publishing; 2017.

Mallick PK. Materials, design and manufacturing for lightweight vehicles. 1st Editio. Woodhead Publishing; 2010.

Michael F. Ashby: Materials and Sustainable Development, ISBN: 978-0-08-100176-9 Butterworth-Heinemann imprint of Elvesier Ltd. (2016)

Michael F. Ashby: Materials Selection in Mechanical Design Third Edition (2003), ISBN:0-7506-6168-2 Butterworth-Heinemann Michael A, Kara J. Materials and Design. 3rd Editio. Butterworth-Heinemann; 2014.

Miscia G, Rotondella V, Baldini A, Bertocchi E, D'Agostino L. Aluminum Structures in Automotive: Experimental and Numerical Investigation for Advanced Crashworthiness. Int. Mech. Eng. Congr. Expo., 2015.

Solazzi L. Wheel rims for industrial vehicles: comparative and experimental analyses, International Journal of Heavy Vehicle Systems, Vol. 18, No. 2, pag. 214 – 225 (2011)

Solazzi L. Design of an aluminium boom and arm for an excavator, Journal of Terramechanics n°47 (2010) pagg. 201-207.

Solazzi L., Scalmana R. New Design Concept for a Lifting Platform made of Composite Material, Applied Composite Materials, An International Journal for Science and Application of Composite Materials, ISSN 0929-189X Appl Compos Mater, (August 2013), Volume 20, Issue 4, pp 615-626, DOI 10.1007/s10443-012-9287-2, Published online: 14 September 2012

Solazzi L., Incerti G., Petrogalli C., *Estimation of the dynamic effect in the lifting operations of a boom crane,* Proceedings of the 28th European Conference on modelling and simulation , 27-30/05/2014, Brescia , Italy.

Solazzi L., Feasibility study of hydraulic cylinder subject to high pressure made of aluminum alloy and composite material, Composite Structures, Volume 209, 1 February 2019, Pages 739-746. Available online 9 November 2018. https://doi.org/10.1016/j.compstruct.2018.11.021

Solazzi L. Applied Research for Weight Reduction of an Industrial Trailer. FME Trans 2012;40:57–62.

Solazzi L, Assi A, Ceresoli F. New Design Concept for an Excavator Arms by Using Composite Material. Appl Compos Mater 2017.

Tomasz Kubiak: Static and Dynamic Buckling of Thin-Walled Plate Structures ISBN: 978-3-319-00653-6, ISBN: 978-3-319-00654-3 (eBook), Springer (2013) Van Acker K, Verpoest I, De Moor J, Dewulf W, Duflou J. Lightweight Materials for the Automotive: Environmental Impact Analysis of the Use of Composites. Rev Métallurgie 2009:541–6.

Vujic D, Lazarevic O, Batinic V. Development of dynamic-mathematical model of hydraulic excavator. J Cent South Univ 2017;24:2010–8.

Winck RC, Elton M, Book WJ. A practical interface for coordinated position control of an excavator arm. Autom Constr 2015;51:46–58.

Zrnić, N.D., Gašić, V.M., Bošnjak, S.M.: Dynamic responses of a gantry crane system due to a moving body considered as moving oscillator, Volume 15, Issue 1,1 January 2015, Pages 243-250 Elsevier

AUTHORS BIOGRAPHIES

SOLAZZI LUIGI graduated in Master of Science in Mechanical Engineering in 1994 at the University of Brescia, Italy. At the same University he received the Ph.D in Applied Mechanics in 1999. Assistant Professor from 2000 to 2018. Actually he is associate professor in Machine Design at the University of Brescia and his teaching activity is related to the courses of Machine and Vehicle Design. He is author of papers dealing with the: conceptual and structural design of components for automotive, lifting equipment, crane, working platform and so on

performed by experimental analyses (strain gauges or accelerometers) and by numerical methods (finite element method); machine components design by using non-conventional materials like high strength steel, aluminium alloys, composite materials and suitable element method); machine components design by using non-conventional materials like high strength steel, aluminium alloys, composite materials and suitable materials, the focus is to optimization and lightweight the components.
His e-mail address is: luigi.solazzi@unibs.

CERESOLI FEDERICO was born in Italy and went to the University of Brescia, where he studied mechanical engineering and obtained his degree in 2017. He is Ph.D student in Applied Mechanics in the Department of Mechanical and Industrial Engineering of Brescia University and works for Machine Design Group. His activity regards the study of structural components lightweight using also non-conventional material like composite materials, eco-compatibility and eco-sustainability materials.
His e-mail address is: f.ceresoli002@unibs.it

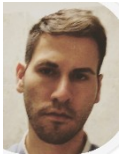

CIMA MICHELE was born in Italy and went to the University of Brescia, where he studied mechanical engineering and obtained his degree in 2012. He is Ph.D student in Applied Mechanics in the Department of Mechanical and Industrial Engineering of Brescia University and works for Machine Design Group. His activity regards the study of fatigue phenomena for metallic and non-metallic material in particular in the time domain and in the frequency domain.
His e-mail address is: cima.michele@gmail.com