A COMPUTATIONAL MODEL OF ACUTE PAIN

Karen Prince, Jackie Campbell, Phil Picton, Scott Turner
Centre for Healthcare Education
University College Northampton
Boughton Green Road, Northampton
England, NN2 7AL
E-mail: k.m.fulstow@btinternet.com

KEYWORDS

Acute pain, Mathematical modelling, Gate control theory, Interneurons, T cells.

ABSTRACT

In 1965 Melzack and Wall proposed the influential gate control theory of pain. This theory postulates that the substantia gelatinosa, located within the spinal cord, acts as a gate control mechanism which can influence the flow of information to the brain and thus impact on the pain experience. Subsequent research has, in general, supported this theory. The theory presented is very explicit and the fact that pain is a poorly understood phenomenon suggests it is an ideal candidate for modelling. Despite this, the utilisation of such techniques has been very limited. This paper successfully replicates the mathematical model presented by Britton and Skevington, and expands on their work to make the model more biologically plausible and provide a basis for further work with this model.

INTRODUCTION

Pain is a personal subjective experience that requires psychological awareness and can occur without tissue damage. By definition it is '*an unpleasant sensory and emotional experience associated with actual or potential tissue damage, or described in terms of such damage*' (Merskey and Bogduk 1994). This definition of pain clearly demonstrates the duality between the physiological and psychological experience. It is probably due to this, that despite much research, pain remains a phenomenon that is poorly understood. Theories of pain all possess inadequacies and limitations and only explain part of the pain process. From these theories and their own observations Melzack and Wall (Melzack and Wall 1965) proposed the influential gate control theory (GCT). With the inclusion of a descending control, it was possible to explain the variation in the pain felt between individuals, and how pain intensity is not in direct relation to tissue damage as cognitive, emotional, social and environmental factors can all influence pain. This explicit theory made it feasible to express in a mathematical model (Britton et al. 1996; Britton and Skevington 1989). However despite the success of this model this useful and powerful technique has not been utilised further in this field. With more research now available on pain it seems appropriate to extend the model to ascertain if it is still successful. Firstly however, it needed to be replicated. The following will give a brief outline of the processes involved in pain, limiting the review to only those involved with cutaneous stimulation. An overview of the gate control theory (Melzack and Wall 1965) will be presented before considering the mathematical model (Britton et al. 1996; Britton and Skevington 1989)

Physiology of Pain

Studies that have used blocking techniques have implied the existence of specialised receptors that respond to tissue damage or to potential tissue damage (Bessou and Perl 1969; Burgess and Perl 1967). The existence of these nociceptors, sensitive to a variety of different kinds of stimulus - thermal, mechanical and chemical - have been confirmed by subsequent studies (see review by Besson and Chaouch 1987). When an adequate stimulus is applied to the skin, the receptors located here convert the physical energy into electrochemical energy. Information is then transmitted in the form of trains of action potentials (similar to pulse trains) via nerve fibres to the dorsal horn of the spinal cord, which then activates the associated transmission neuron, which is the first stage of the pathway to the cortex, and hence into consciousness.

The fibres that convey information from the receptors consist of large myelinated (insulated) Aβ fibres and small unmyelinated and myelinated (C and Aδ respectively) fibres. Aβ fibres are primarily involved in the transmission of non-painful sensation such as touch. Aδ fibres are associated with well-localised sensations of sharp, pricking pain and also subserves pressure, crude touch, and temperature. C fibres are involved in diffuse pain sensations that can be dull, poorly localised and persistent (Ochoa and Torebjork 1989; Torebjork and Ochoa 1980) whilst also subserving temperature. Pain is felt following stimulation of Aδ fibres (first pain), this then builds up and intensifies when C fibres are also activated (second pain).

Proceedings 18th European Simulation Multiconference
Graham Horton (c) SCS Europe, 2004
ISBN 3-936150-35-4 (book) / ISBN 3-936150-36-2 (CD)

Dependent on their function, these fibres terminate in laminae I, II and V in the dorsal horn, which then activate associated neurons. Of particular interest for pain are the wide dynamic range (WDR) neurons and the nociceptive specific (NS) neurons. Receiving inputs from nociceptive and non-nociceptive fibres the WDR cells can be found in the deeper laminae of the dorsal horn. Conversely the NS neurons can be found in the superficial laminae of the dorsal horn, receiving inputs from C fibre afferents.

It is predominantly the lamina II (substantia gelatinosa (SG)) that Melzack and Wall (Melzack and Wall 1965) attribute with the gate mechanism, modulating the flow of pain information to the brain, and directly affecting the pain experience. Following peripheral stimulation, the afferent impulses from the large (Aβ) and small (C, Aδ) fibres are received directly at the SG and the first transmission (T) cells. As illustrated by figures 1, the T cells also receive input from the inhibitory (I) and excitatory (E) interneurons that are located deep within the SG. As well as large fibre input, the inhibitory interneuron also receives efferent information from the descending control. In 1965 there was little evidence to verify the existence of such a descending control, however subsequent findings have supported it (see review by Fields and Basbaum 1999). Initially just inhibition was thought to occur, however more recent evidence suggests that there is also a facilitatory action of efferent impulses on nociceptive transmission (Zhuo and Gebhart 1992). On receiving the afferent impulses the T cells perform spatial and temporal summation of all the arriving impulses, which then triggers an action system, and it is this system that is responsible for the experience and behaviour of pain.

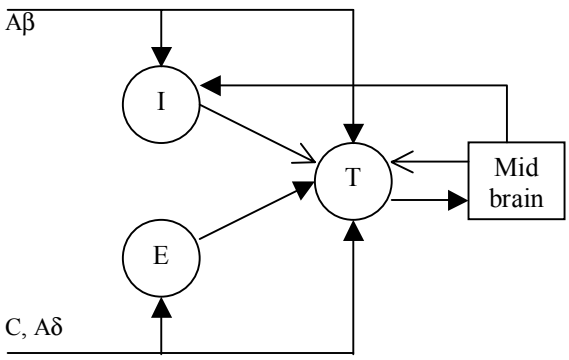

Figures 1: The Basic Architecture of the Gate Control Theory used in the Mathematical Model of Pain; the filled arrows denote excitation, the unfilled arrows inhibition

Modelling of pain

The utilisation of computational models in the field of pain has been very limited. In 1981 Minamitani and Hagita (Minamitani and Hagita 1981) produced a neural network that was able to simulate the conduction mechanisms involved in pain. Haeri at al (Haeri et al. 2003) produced an Artificial Neural Network (ANN) to model steady state behaviour of pain mechanisms and allow prediction of pain given a novel stimulus. Britton and Skevington (Britton et al. 1996; Britton and Skevington 1989) used the explicit nature of the gate control theory to extrapolate the relevant features and translate it into a mathematical model.

The mathematical model (Britton et al. 1996) was subjected to four simulations. The first simulation was constant small fibre input with variable large fibre input. A successful simulation provides support for what has been mainly anecdotal evidence as independent stimulation of small and large fibres is difficult to achieve experimentally. The next simulation Britton and Skevington completed involved small fibre input only. This was to ascertain that as the small fibre input is increased so to does the T cell output at a rate slightly greater than linear. Wind-up (Mendell 1966) was also simulated. This involves the repeated stimulation of C fibres resulting in a progressive increase in the T cell response. Evidence suggests that stimulation of glutamate receptors, in particular N-Methyl D Aspartate (NMDA) receptors are involved in the wind-up process and Birtton and Skevington were able to illustrate this relationship. The last simulation was that of ramp-off, this occurs when the stimulus is ramped off causing a pulse of pain (Humphries et al. 1993; Humphries et al. 1996). Whilst the model produced expected results in line with the literature, certain assumptions were made in order to simplify the model, as laid out in figure 1. Inputs received by the T cell were from one large fibre (Aβ), one small fibre (C), one inhibitory neuron and one excitatory neuron, with no input from Aδ fibre. Neighbouring T cells were assumed to behave in the same way and that any input from Aδ would not affect the results. Assumptions of this nature are common in order to simplify such complex processes whilst leaving the salient features intact, however, they render the model less biologically plausible.

This paper replicates Britton and Skevington's model and expands it further to ascertain if it is still successful. It will explore whether the neighbouring T cells behave in a similar fashion, and seek to resolve if an increase in T cells and associated cells greatly affects the results previously examined.

METHOD

Replication of the Mathematical Model

Using the differential equations given by Britton and Skevington (Britton et al. 1996) the model was translated into MATLAB version 6. The differential equations used were:

$$\tau_i V_i = -(V_i - V_{i0}) + g_{li}(x_i) + g_{mi}(x_m) \quad (1)$$
$$\tau_e V_e = -(V_e - V_{e0}) + g_{se}(x_s, V_e) \quad (2)$$
$$\tau_t V_t = -(V_t - V_{t0}) + g_{st}(x_s) + g_{lt}(x_l) + g_{et}(x_e) - g_{it}(x_i) - g_{mt}(x_m) \quad (3)$$
$$\tau_m V_m = -(V_m - V_m) + g_{tm}(x_t) \quad (4)$$

The precise nature of the equations used is as follows:

$$0.7V_i = -(V_i + 70) + 60\tanh(\theta_{li} x_i) + 40\tanh[f_m(V_m)] \quad (5)$$
$$0.7V_e = -(V_e + 70) + 40\tanh(\theta_{se} x_s)\{1 + 2.9\tanh[4 f_e(V_e)]\} \quad (6)$$
$$0.7V_t = -(V_t + 70) + 40\tanh[\{1 - \theta_{se})x_s] + 40\tanh[(1 - \theta_{li})x_l] + 40\tanh[f_e(V_e)] - 40\tanh[f_i(V_i)] - 40\tanh[f_m(V_m)] \quad (7)$$
$$0.7V_m = -(V_m + 70) + 40\tanh[f_t(V_t)] \quad (8)$$

The mathematical model calculates the slow potential (V_j) for the inhibitory SG cell (1,5), the excitatory SG cell (2,6), T cell (3,7) and the midbrain (4,8). The firing frequency (x_j) at which the cell fires is a function of their slow potential, given by the function f. The qualitative features of f and g (monotone increasing function) are presumed known and $g \circ f$ is a saturating function, as the firing rate cannot increase indefinitely. In equation (6) $\tanh[4 f_e(V_e)]$ is the NMDA component of the equation. The resting potential of a cell is taken to be –70mV. θ_{li} and θ_{se} denotes the amount of input that passes through the interneurons, whilst $(1-\theta_{se})$ and $(1-\theta_{li})$ represents the proportion passing through the T cell. The output from the T cell is taken to be in direct relation to the pain experience, such that if the T cell exceeds its firing threshold of -55mV then pain is felt.

The input values of x_s and x_l given for the four simulations performed were:

1. Constant small fibre input, variable large fibre input
   $x_s = 2.0, \quad 0.0 \geq x_l \geq 3.0$
2. Small fibre input only
   $x_s = 2 \tanh t, \quad x_l = 0.0$
3. Wind-up simulation
   $x_s = 2.5 \cos^8(2\pi t) \quad x_l = 0.1 x_s$
4. Ramp-off simulation

$$x_s = \begin{cases} 2 & \text{if } 0 \leq t \leq 7, \\ 10(7.2 - t) & \text{if } 7 < t < 7.2, \\ 0 & \text{if } t \geq 7.2, \end{cases}$$

$$x_l = \begin{cases} 1 & \text{if } 0 \leq t \leq 6, \\ 5(6.2 - t) & \text{if } 6 < t < 6.2, \\ 0 & \text{if } t \geq 6.2, \end{cases}$$

Extension of the Model – Two Units

The architecture of Britton and Skevington's model, as described previously and shown in figures 1, assumed that neighbouring T cells behaved in the a similar way. To establish if this assumption was justified and to see if increasing the number of units would alter the T cell potential the model was extended. The midbrain received input from more than one unit. Each unit consisted of one small and one large fibre input, one inhibitory and one excitatory interneuron and one T cell. If two units were required then equations (5),(6) and (7) were repeated. The output from each T cell was then inputted into the differential equation for the midbrain. Thus the midbrain equation was as follows:

$$0.7V_m = -(V_m + 70) + 40\tanh[f_t(V_t)] + 40\tanh[f_{t1}(V_{t1})] \quad (9)$$

A model consisting of two units was then constructed and the four simulations used previously were performed, recording the theoretical T cell potential to offer a direct comparison.

Multiple Models

The advantage of manually adding the units to the model, as described above, allows differing small and large fibre inputs to be fed into the differing units, which is something that will be explored in future work. The problem with such a model is that it is very time consuming. So a second model was produced that could perform the same simulations using N units.

For this, a function was devised and completed in MATLAB to perform the addition of units to the equation. Again the same values for simulation were used to offer a direct comparison and the number of units were increased in denominations of ten, until 50 units completed, and then the number of units increased by 50 until 200 units had been implemented.

RESULTS

Replication of the Mathematical Model

The differential equations proposed by Britton and Skevington were run on a mathematical program with four simulations being performed; variable large fibre input with a constant small fibre input, small fibre input only, wind up simulation and ramp off simulation. The results produced were in accordance with Britton and Skevington's (see Britton and Skevington 1996). Simulation 1 was repeated six times to record T cell potential over time; large fibre input was presented at 0.5 through to 3.0 with increments of 0.5 with each pass. The results show that when large fibre input is at 0.5 the T cell potential is approximately –20mV. As the input increases, the T cell potential decreases to around –25mV. When the input is run at 3.0, the T cell potential has increased back to –20mV

Two Units

The model was extended to include two units, each consisting of one large and one small fibre input, one inhibitory and one excitatory interneuron and one T cell that was inputted into the midbrain. The T cell potential was then recorded, for each of the four simulations, as it is this that is taken to be indicative of the pain experienced.

When the T cell potential is recorded against the increase in large fibre input with the small fibre stimulation held constant, there is very little difference in the results compared to when there is only one unit present (see figures 2). It also shows that the T cell potential for the two neighbouring units is identical, as would have been predicted with this model.

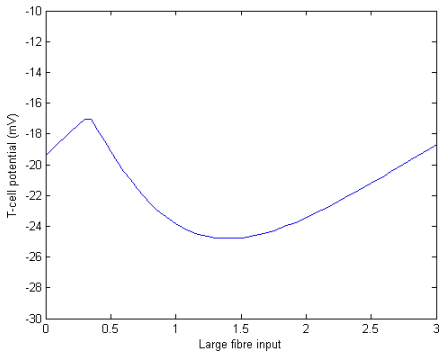

Figures 2: The Theoretical T Cell Potential for Two Units with Variable Large Fibre Input and Constant Small fibre stimulation

When the same simulation was conducted, this time with the T cell potential plotted over time starting with large fibre input at 0.5 through to 3.0 increasing in increments of 0.5 there was a change in results between one and two units. In all cases the theoretical T cell potential was lower when there were two units present. The pattern of the T cell potential also differed; after an initial increase the T cell potential fell slightly before levelling off when two units were implemented (see figures 3). In comparison, when there is only one unit present the T cell potential reaches its highest point and then levels out (see figures 4). This offers further support to the gate control theory as it states that the gate is held in a relatively open position, so that information regarding pain can flow freely. The large fibre input is known to be extremely effective in activating T cells. The ensuing reduction in T cell activity is due to the activation of the inhibitory interneuron by the large fibre input and the descending control. The levelling of the T cell potential occurs where the large and small fibre input counteracts one another.

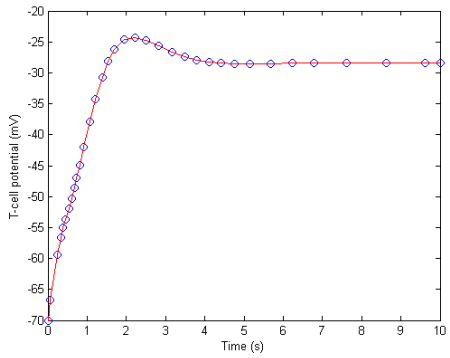

Figures 3: Theoretical T Cell Potential when Two Units Modelled with Large Fibre Input at 3.0 and Small Fibre Input at 2.0

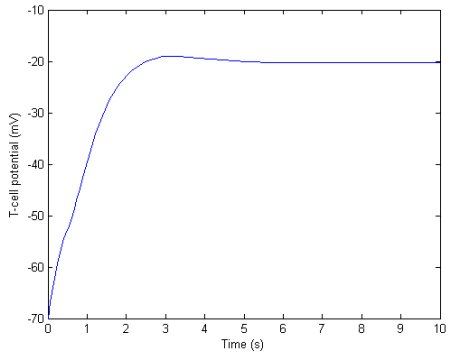

Figures 4: The Theoretical T Cell Potential when One Unit Modelled with Large Fibre Input at 3.0 and Small Fibre input at 2.0

When there is only small fibre input, the T cell potential reaches a peak and then falls off very slightly. The theoretical T cell output is also marginally lower then when compared to the results for only one unit. Inhibition would be expected to be less prevalent as there is no large fibre input. Thus any occurrence of inhibition is due to the descending control, which influences the inhibitory interneuron. There are no notable changes in the results for wind up, with the same pattern and T cell potential reported for two units as with one unit. For ramp off, after the initial rise in T cell potential, there is a more marked decrease before the pulse of pain occurs. The T cell potential for two units is also lower. Given the previous results, this was perhaps not unexpected.

Multiple units

A function was developed in MATLAB to allow N number of units to be selected and the program would return the T cell potential for that number of units. All units received the same input value from the small and large fibres and the four previously used simulations were performed. As with previous results the first stimulation was run with T cell potential recorded over

time. Figures 5 illustrates that when the units are increased to 10 there is a very different pattern that emerges for the T cell potential. After an initial rise followed by a fall in T cell potential, as seen previously, there is a further rise before it levels out. At 200 units the T cell potential rises and falls several times before it levels out (see Figures 6). What also becomes apparent is as the number of units is increased the T cell potential decreases. When there is only one unit the T cell potential reached for simulation 1 when large fibre input is at 3.0 is approximately –20mV, by 200 units it is around –52mV just above the firing threshold of -55mV.

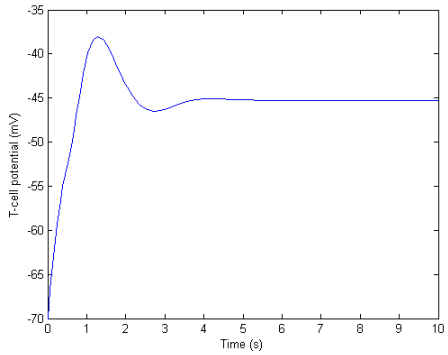

Figures 5: The Theoretical T Cell Potential with 10 Units, Large Fibre Input at 3.0 with Small Fibre Input at 2.0

Figures 6: The Theoretical T Cell Potential with 200

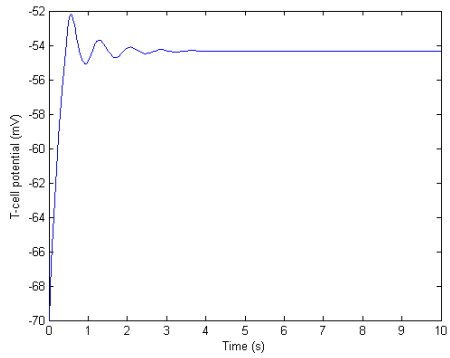

Units, Large Fire Input at 3.0 with Small Fibre Input at 2.0

Similarly, for the remainder of the simulations; small fibre input only, windup and ramp off, a similar pattern emerged in that the T cell potential output decreased as the number of inputs increased. Also the output pattern changed in that in the case of simulation 2, T cell potential after an initial rise, dropped and then rose again before it levelled out. For windup, up to 50 units once the T cell potential had reached its peak the rise and fall in potential remained to the same levels. However, post 50 units although the T cell potential continued to rise and fall to the same levels, what was observed in between was a lesser rise in T cell potential followed by a slight decrease before increasing further.

DISCUSSION

The primary aims of this paper were to replicate the Britton and Skevington mathematical model for pain and extend this model further to be more biologically plausible. The ability to replicate the model adds to the robustness of it and supports the model proposed. With mathematical software available such as MATLAB it means that the model can be extended and manipulated with relative ease. This has resulted in the production of a model that is now more biologically plausible and yet, although it has produced different results to those perhaps expected, it remains within the essence of Melzack and Wall's paper. Some of the results have also given rise to further questions. In particular we refer to the multiple units and the reduction in the T cell potential when the number of units is significantly increased. This leads to the suggestion that if the number of units were increased further then the T cells may fail to fire, or they might reach a saturation point from which they go no lower. This indicates the importance of the level of input both in terms of the number of small and large fibres activated and their frequency. From these observations a model is currently being produced that has multiple small and large fibre input, enabling further testing to ascertain their impact on the model.

The inclusion of two units produced the results that would be expected in that the neighbouring T cells behaved in the same manner. This was not unexpected as they received the same small and large fibre inputs. What is significant about the model is that it allows different input values to be attached to the small and large fibre inputs to each unit. From this we are currently in process of simulating transcutaneous electrical nerve stimulation (TENS) and acupuncture. TENS works by high frequency, low amplitude stimulation of large peripheral fibres, whilst acupuncture involves low frequency, high amplitude stimulation of small Aδ fibres. Stimulation as described by these methods produces modulation at the gate. As acupuncture involves Aδ fibre activation a time delay needs to be implemented so that Aδ and C fibres (corresponding to first and second pain respectively) can be modelled. A model that is able to test the effectiveness of such pain relief techniques could have significant implications for how pain is treated. There still remains much debate as to how effective these techniques are, the type of pain that it modulates, and at what point it fails to have any benefit (Sluka and Walsh 2003).

Despite its success the model has some very crucial limitations that we will endeavour to explore further. Firstly, the role of the midbrain is very simplified.

Although a single pain centre in the brain has been refuted, imaging studies have made clear that there are many regions of the brain involved in the pain process, making it more similar to consciousness than to primary sensory modalities. A previous neural network model (Minamitani and Hagita 1981) has explored some of the connections of the brain regions involved, and it remains something vital to any comprehensive model of pain. Also the problem of chronic pain needs to be addressed. So far the limited models produced have mainly focused on acute pain, as this is better understood. However, it is chronic pain that causes many to suffer and modelling this could prove vital for research in this area. Neural networks could provide the way forward for this, as plasticity would need to be a key feature. One such suggestion is the use of chaotic neural networks, which are capable of modelling such plasticity (Picton et al. 2001).

CONCLUSION

The gate control theory (Melzack and Wall 1965) was the first to offer a resolution to the duality between the physiological and psychological experience present in the pain phenomenon. The mathematical model successfully gives a good approximation of the inputs involved and how the inputs affect the related cells and activate them to produce pain. However, in order to provide a more comprehensive model to explain acute and chronic pain further work is required to include multiple fibre input, plasticity and a comprehensive descending control. The work completed so far certainly supports the utilisation of modelling in the field of pain.

REFERENCES

Besson, J.M. and Chaouch, A., Peripheral and Spinal Mechanisms of Nociception, Physiological Reviews, 67 (1987) 67-186.

Bessou, P. and Perl, E.R., Response of cutaneous sensory units with unmyelinated fibres to noxious stimuli, Journal of Neurophysiology, 32 (1969) 1025-1043.

Britton, N.F., Chaplain, M.A.J. and Skevington, S.M., The role of N-methyl-D-aspartate (NMDA) receptors in wind-up: A mathematical model, Journal of Mathematics Applied in Medicine & Biology, 13 (1996) 193-205.

Britton, N.F. and Skevington, S.M., A mathematical model of the gate control theory of pain, J. theor. Biol., 137 (1989) 91-105.

Burgess, P.R. and Perl, E.R., Myelinated afferent fibres responding specifically to noxious stimulation of the skin, Journal of Physiology-London, 190 (1967) 541-562.

Fields, H.L. and Basbaum, A.I., central nervous system mechanisms of pain modulation. In: P.D. Wall and R. Melzack (Eds.), Textbook of Pain, Churchill Livingston, Edinburgh, 1999, pp. 309-329.

Haeri, M., Asemani, D. and Gharibzadeh, S., Modeling of pain using artificial neural networks, Journal of Theoretical Biology, 220 (2003) 277-284.

Humphries, S.A., Johnson, M.H. and Long, N.R., an investigation of the gate control theory of pain by ramping-off the experimental pain stimulus of potassium iontophoresis, abstracts of the 7th world congress on pain, IASP, Seattle, 1993, pp. 468.

Humphries, S.A., Johnson, M.H. and Long, N.R., An investigation of the gate control theory of pain using the experimental pain stimulus of potassium iontophoresis, Perception & Psychophysics, 58 (1996) 693-703.

Melzack, R. and Wall, P.D., Pain Mechanisms: A New Theory, Science, 150 (1965) 971-979.

Mendell, L.M., Physiological Properties of Unmyelinated Fiber Projection to the Spinal Cord, experimental neur, 16 (1966) 316-22.

Merskey, H. and Bogduk, N., Classification of Chronic Pain: Definitions of Chronic Pain Syndromes and Definitions of Pain Terms, International Association for the Study of Pain, Seattle, 1994.

Minamitani, H. and Hagita, N., A Neural Network Model of Pain Mechanisms Computer Simulation of the Central Neural Activities Essential for the Pain and Touch Sensations, Ieee Transactions on Systems Man and Cybernetics, 11 (1981) 481-493.

Ochoa, J. and Torebjork, E., Sensations Evoked by Intraneural Microstimulation of C Nociceptor Fibers in Human-Skin Nerves, Journal of Physiology-London, 415 (1989) 583-599.

Picton, P.D., Campbell, J.A. and Turner, S.J., Modelling Chronic Pain: An Initial Survey, Proc. 8th International Conference on Neural Information Processing, Shanghai, 2001.

Sluka, K.A. and Walsh, D., Transcutaneous electrical nerve stimulation: Basic science mechanisms and clinical effectiveness, Journal of Pain, 4 (2003) 109-121.

Torebjork, H.E. and Ochoa, J.L., Specific Sensations Evoked by Activity in Single Identified Sensory Units in Man, Acta Physiologica Scandinavica, 110 (1980) 445-447.

Zhuo, M. and Gebhart, G.F., Characterization of Descending Facilitation and Inhibition of Spinal Nociceptive Transmission from the Nuclei Reticularis-Gigantocellularis and Gigantocellularis Pars Alpha in the Rat, Journal of Neurophysiology, 67 (1992) 1599-1614.

AUTHOR BIOHGRAPHY

KAREN PRINCE was born in Peterborough, England and went to the University of Hertfordshire, where she studied cognitive science and obtained her degree in 2001. Currently she is working towards her PhD at University College Northampton. Her email address is k.m.fulstow@btinternet.com.

JACKIE CAMPBELL was born in Northamptonshire and studied physics at Liverpool University and medical physics at the University of Surrey. She worked in pain research at the Pain Relief Foundation and Walton Hospital in Liverpool, and gained her PhD in the electrophysiology of the human spinal cord. She is currently Professor of Neurophysiology and Head of Research and Consultancy in the School of Health at University College Northampton. Her e-mail address is jackie.campbell@northampton.ac.uk

PHIL PICTON was born in South Wales and did his Electronics degree at Swansea University followed by his PhD in Logic Design at Bath University. He was a Lecturer in Electronics at The Open University for 10 years and is now Professor of Intelligent Computer Systems at University College Northampton. His research is in the application of artificial intelligence techniques, particularly neural networks, to a variety of modelling problems. His e-mail address is phil.picton@northampton.ac.uk.

SCOTT TURNER was born in Birmingham, U.K did his electronic degree at University of Hull followed by MSc in Biomedical Instrumentation Engineering at the University of Dundee and PhD from the University of Leicester. Currently a Lecturer at University College Northampton. His email address is scott.turner@northampton.ac.uk.