Product Manufacturing Information (PMI) in 3D models: a basis for collaborative engineering in Product Creation Process (PCP)

Patrick ANDRE
Roberto Sorito
Robert Bosch GmbH
FV/PLE2
P.O Box 30 02 40
70442 Stuttgart - Germany
E-mail1: patrick.andre@de.bosch.com
E-mail2: roberto.sorito@de.bosch.com

KEYWORDS
PMI, DMU, Collaborative engineering

ABSTRACT

The current situation in PCP is marked by development of complex products taking into account quality, costs, time and innovation aims in a concurrent environment. Unidentified mistakes in early phases cause high expenses and time delays in late phases.
A possible solution is collaborative engineering based on digital mock-up (DMU). DMU is a basis for visualization based on complete and current 3D models, and used by product development teams as a communication method. During discussion of product geometry based on DMU (kinematics, assembly...), the visualization and the use of PMI in 3D models are fundamental points. PMI in DMU drives key activities like design or manufacturing: PMI in 3D models is not only text describing technical requirements, it has also to integrate non-technical information that has direct or indirect links with time, costs, quality or innovation aims. This paper presents results and propositions concerning the visualization and the use of PMI in 3D models in collaborative engineering environments.

GENERAL CONTEXT

A collaborative engineering need

The efforts for product development have increased dramatically for all sectors of activities in the last ten years. In particular for car manufacturers, due to the increasing amount of different car models and car variants. In a competitive and aggressive industrial context, the requirements for the construction of new products in terms of quality, costs, time and innovation became extremely important. In this context, car manufacturers for example, "are more and more acting as a product integrator during the product creation phase , and they specify targets and requirements, choose suppliers, co-develop systems with suppliers" (Le hen 2002). Therefore, the ability to perform and to manage cooperative work efficiently as well as the exchange of product model data in all the phases of product live cycle, especially in product development, have become the major key factors (Bögershausen and Schiemenz K 2000).

Drawings in our e-period: still a necessity?

One critical point in terms of functionality and time in this collaborative environment, is the use of drawings. Drawings are used as common "langage" in PCP. The exchanges of drawings between all the actors involved in the PCP are not very easy, seem to be old fashioned in our e-period and not fast enough.
The use of all the information existing on drawings, PMIs and geometry, has to be supported by new technologies that allow a better exchange of information in an environment supporting collaborative engineering.

DMU: a solution

A possible solution is digital mock-up (DMU). DMU, based on 3D visualization, will be used by product development teams that includes CAD and non CAD users, as an intern or extern communication method, and as a basis of work. DMU becomes the new common "langage" and substitutes the traditional drawings. DMU will improve the cooperation between product and process developers in the early phase of PCP. The goal is to take better decisions in terms of quality, costs, time and innovation during early stage of PCP by promoting cooperation in product development teams based on DMU.
The visualization and the use of PMI in DMU and in particular in 3D models in a collaborative environment are fundamental points. It drives directly or indirectly activities like design, manufacturing, planning or maintenance. Unfortunately, there is no defined standard concerning the use of PMI in 3D models.

In the next parts of this paper, a state of the art concerning the capabilities and limits for usage of PMIs in 3D CAD systems will be described. Next, the usage of PMIs in 3D viewings systems will be proposed. The last part of this paper will describe use cases of PMIs in simulation.

PMI IN CAD SYSTEMS: STATE OF THE ART

Capabilities of CAD systems

The four main CAD systems propose the possibility to add PMI in 3D models. For IDEAS Ms8 and Pro/ENGINEER 2001, a PMI module is built-in. Concerning CATIA V5R7 and Unigraphics V16.0.2, it is necessary to buy a special module for the use of PMI. For almost all the CAD systems, it is possible to add every kind of PMIs in 3D models respecting the international norms. It is possible to add different type of dimensions (e.g: radius, diameter), geometrical tolerances with the whole range (form, profile, run-out, orientation and location), numerical tolerances on dimensions, surface finish values and types, multiple attributes to customize dimensions, notes and indications about a part. CAD systems propose interesting aspects concerning the use of these PMIs in 3D models. These aspects can be divided in two main topics: visibility of PMI and PMI with semantic.

Visibility of the information

One difficulty concerning the use of PMI in 3D models is the visibility of the information. It is better to have no information rather than non-exploitable information.

In order to describe entirely a model, it is sometimes necessary to add hundreds of PMIs. Therefore it is necessary to use tools that allow the user to select and visualize a particular type of PMI and to visualize its associated part of the geometry.

Visualization of PMIs by type and by direct selection

In IDEAS Ms8, it is possible to select and visualize some PMIs only by clicking on the respective PMIs. This property is interesting for users who are only interested in a specific PMI.

It is also possible to visualize only a type of PMI in the 3D model. In IDEAS Ms8, it is possible to select a kind of PMI by using the filter option (**Fig.1**)

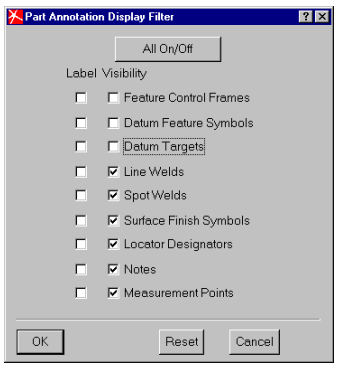

Figure 1: "Part annotation display window filter" where the users can select the PMI they want or not want to see in the 3D environment - Source: *IDEAS Ms8*

Association between a PMI and a part of the geometry

A PMI is almost always linked to a part of the geometry. The links between these two entities are fundamental. A PMI has a sense only with its associated part of the geometry. Therefore, it is also very important to link "physically" and to visualize the association between a PMI and its associated part of the geometry. CATIA V5R7 and IDEAS Ms8 propose a solution. In the 3D environment, when the user clicks on a PMI, the associated part of the geometry is highlighted **(Fig. 2)**. The reciprocal is also true. By clicking on a part of the geometry (surface, line, group of surfaces), all the PMIs linked to this part are automatically highlighted. This propriety is interesting for users who are only interested in a part of the geometry.

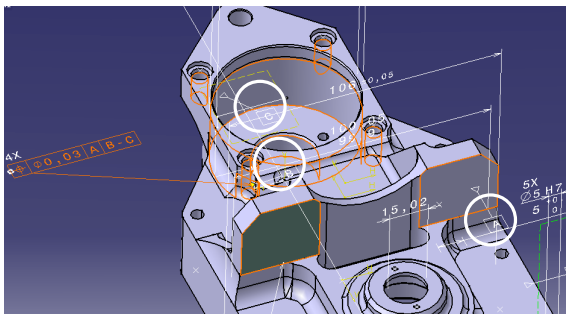

Figure 2**:** When the user clicks in the feature control frame, all the direct or indirect associated parts of the geometry are highlighted. In this case, the four holes (toleranced zones) and the referenced zones corresponding to the datum features A, B and C are highlighted - Source: *CATIA V5R7*

PMI with semantic

Some CAD systems give the user the possibility to use a PMI not only as a text but also as an information with a meaning that helps the designer to conceive the product.

ISO tolerance for schafts and holes

Pro/ENGINEER 2001 and CATIA V5R7 give us solutions concerning the use of ISO tolerances for schafts and holes. For each of these CAD systems, there is a special library where you can add the specific symbols. Moreover, these systems know implicitly the values of the tolerance corresponding to the symbol for schafts and holes. The user has the possibility to display two tolerances format at the same time **(Fig.3)**. This property is very interesting because it prevents users from using own.

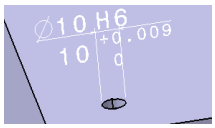

Figure 3: Double information: ISO tolerance for schafts and holes with the meaning of the tolerance - Source: *CATIA V5R7*

Syntax control during the creation of feature control frame

A critical point during the conception of a product is to specify PMIs in the model. The type of PMI to be created and the value of tolerances depend on several parameters: a PMI is derived from the functionality and the feasibility requirements of the product. In this phase, the designer has to create PMIs and has to respect some syntax rules during its creation. Because of the low knowledge of these rules, the designer could make some mistakes during the creation of a PMI. CATIA V5R7 and IDEAS Ms8 have a special option that allows the user to check all the PMIs built. For example in IDEAS Ms8, when a user makes a mistake

during the creation of a PMI, the system displays an error message and explains the reason of the mistake **(Fig. 4)**.

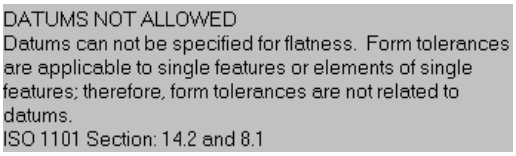

Figure 4: the error message window appears when the user controls the syntax of the created PMIs. The reason why a PMI has a syntax mistake is explicitly described - Source: *IDEAS Ms8*

Limits of the offer in CAD systems

systems

The offer of CAD systems concerning the addition of PMIs is interesting and is a field of development. The variety of PMIs given is large. Moreover, PMIs are not only texts describing technical information: there is also an helpful semantic for the designers.
Unfortunately, the use of 3D models with PMIs in CAD systems in a digital collaborative environment is not easy and non applicable yet. The CAD systems are only used and built by and for designers, an important part of the collaboration team. One direct consequence is that non CAD users can not exploit easily the information given by the PMIs in CAD systems and, that PMIs are only oriented on technical aspects.
This is the reason why it is necessary to use a 3D platform only for the visualization of the geometry and PMIs. This platform will be used by the team during the PCP that can include CAD or non CAD users. Moreover, the PMIs have also to integrate non technical information that are a necessity during the PCP.

PMI IN 3D VIEWING: A BASIS FOR COLLABORATIVE ENGINEERING

Costs, quality, time and innovation considerations

A basis in the relation between customer and supplier(s)
The first contacts between a client and a supplier is the basis of the product creation process. The main ideas concerning the requirements to the product are defined. In this early phase, the main question asked by the customer to the supplier is: Are you able to create this **innovative** product in terms of **quality**, **costs** and **time**?
In order to answer to this question, the supplier has to proceed a complete intern analysis (research and development, production departments...) for all the requirements.
The three possible main answers of the supplier to this question are:

- yes, we can meet all your requirements
- yes, we can meet all your requirements and we propose you an **innovation** that improves your product
- no, we can not meet your requirements but we propose you this offer in terms of **quality**, **time** and **costs**.

In this early phase, the notions of quality, costs, time and innovation are very important. The discussion and the links between customers and suppliers are directly based on these notions: they drive technical and economical considerations based on the product to be created.

Links between PMIs and this basis: example of use
When the supplier receives the information with the requirements of the client, all the departments of the supplier are studying these data. This study is done by the main departments of the supplier: the research and development, the production, the quality and the sales departments. In the information received by the supplier, there are drawings where are described the geometry of the product and all the PMIs. During the analysis of the requirements, the PMIs are carefully studied.
The following results present the analysis of PMIs by each department of a supplier. These results are based on the analysis made during an intership with the university of Valenciennes (France) of an automative supplier located in Portugal whose name is SONAFI (Andre 2000).

- <u>Analysis of the production department (**Fig. 5**):</u>

We can create the PMIs a and b. The machines of production are already here. For the PMIs c and d, we have to buy two new machines: the costs and the delay for these new machines are **x euros** and **y weeks**. For the PMIs e and f we have the machines of production, but we can not produce 2500 products (customer requirement) per day. We can only produce 1500 products per day. Nevertheless, if we change the PMIs e and f to the PMIs g and h, we could produce 2500 products per day.

- <u>Analysis of the quality department (**Fig. 5**):</u>

For the control of the PMI c during the production process, there is no problem. The control-machines are already here. For the specific PMIs c and d, we have to buy control-machines: the costs and the delay for this new control-machine are **x euros** and **y weeks**. For the PMI b, there is no possibility to control it. But, if we change the value of the tolerance of this PMI, it is possible to control it.

- <u>Analysis of the research and development department (**Fig. 5**):</u>

The product can be improved. If we change the PMI d by the PMI x, we can win this functionality. (**innovation**)

- <u>Analysis of the sales department (**Fig. 5**):</u>

Each PMI costs **money** and **time**. Moreover, each PMI requires a know-how. We can also propose an **innovation**. We will propose this price to the customer.

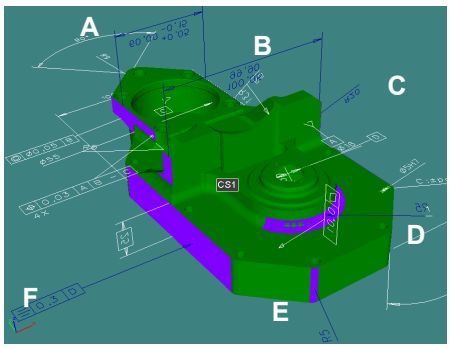

Figure 5**:** identification of the PMIs A, B, C, D, E, F.

The results of the analysis of PMIs are directly or indirectly linked to **quality**, **costs**, **time** or **innovation** aspects. Basically, PMIs are only technical information. But it implies activities that take into consideration non-technical aspects. Moreover, PMIs are also implicitly classified by the different departments of the supplier. This classification depends on each department. There are PMIs that are problematic or presents a basis of discussion for a gain of functionality.

Proposition concerning the use of PMI in 3D viewing

The use of PMIs in 3D viewing has to be helpful and to have a meaning for each that can include CAD and non-CAD users. This is the reason why the use of PMIs could be classified in two main topics:

- Common use of PMIs by the team
- Specific use of PMIs by each team member

Common use of PMIs

- As presented in this paper, it is necessary that PMIs have to be correctly visible in the 3D environment. When the user clicks on a PMI, he has to identify without any problems the associated parts of geometry (with an highlight for example). The reciprocal is also true: when the user clicks in a part of the geometry, all the associated PMIs have to be highlighted (**Fig. 2**).
- A team member has also to identify all the PMIs that are problematic, very important requirements of the client or proposition of the supplier(**Fig. 6**).

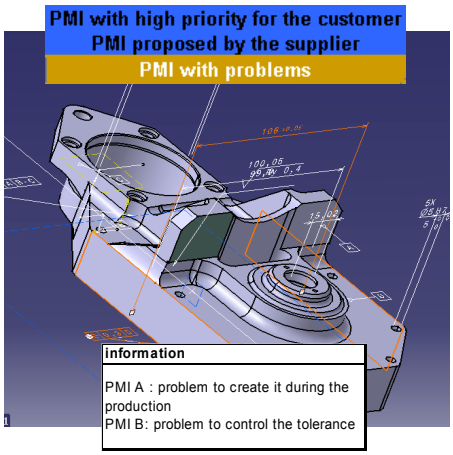

Figure 6**:** When the user clicks with the right mouse button, a window appears with 3 sub-menus (PMI with high priority for the customer/PMI proposed by the supplier/PMI with problems). After selection of the submenu "PMI with problems", all the PMIs with problems are automatically highlighted with its associated geometry. Moreover, an information window appears describing the type of problem for each PMI (not yet realized) - Source: *EAI Vismockup 3.2*

Specific use of PMIs

For each team member, PMIs have a special meaning. The main difficulty is to know exactly the meaning and the specific use of PMIs for all the actors involved in 3D viewing. How can designers, quality or production engineers, responsibles of the sales department use PMIs ? In 3D viewing, there is a necessity to have specific options dedicate to each team member. When a specific user wants to have information about a PMI in the 3D environment, he has to access to the information which is relevant for him (**fig. 7 and 8**).

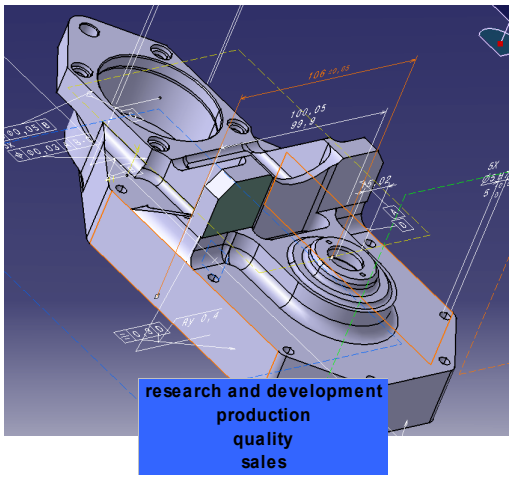

Figure 7: When the user clicks on the PMI with the left mouse button, the PMI and the associated part of the geometry are highlighted. When the user clicks on the PMI with the right mouse button, a dialog box appears with 4 submenus corresponding to a type of user (not yet realized) - Source 3D model: *EAI Vismockup 3.2*

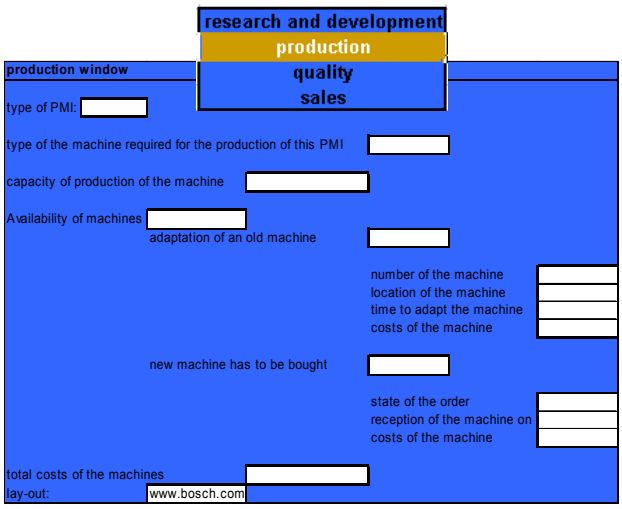

Figure 8**:** After having chosen, the "production" submenu, the user has all the information concerning the way to create the selected PMI. In this example, the user has also information that has direct or indirect link with costs, time, quality and innovation (not yet realized).

PMI AND SIMULATION

NC-Simulation

During the use of NC-Simulation, one critical point is programming. The softwares of NC have to detect all the PMIs and Features in order to create the sequences of manufacturing. According to VDI 2218, features are an

agregation of geometrical elements and/or of a semantic. In our contexte, semantic means PMIs.
The main method concerning the transfer of information for the programming in NC is divided in 3 phases: the first phase is the implementation in the model CAD of the information important for the finish (Features). Then an interface insures their transmission to a programming NC-tool. In this last one, the sequences of manufacturing necessary, the tools and other technological parameters for manufacturing are chosen according to the transferred data.
3D viewing with PMIs is a possible solution for the interface between CAD systems and NC programming. PMI in 3D model can be used efficiently during the creation of NC programs, which are used in NC simulation.

Finite element analysis

For finite element analysis, the user has to access several information concerning the product to be simulated. Generally, all the information necessary for the model creation are given in 2D drawings. PMIs as information describing the geometry and some properties of the product to be simulated have an important role.
The main PMIs used for the simulation are functional dimensions with minimum and maximum tolerances: simulations can be made for each limits. Moreover for sensitivity studies during the simulation (critical parameter,...), the user varies the value of a dimension between the upper and the lower value of its tolerance. The other PMIs as roughness are used for particular cases.
PMIs will be a tool that helps the user to take the information he needs for the modelisation of the product used for the simulation. PMI in 3D model can be used directly by the user for creating the simulation model and for leading sensitive studies.

Tolerance analysis

The tolerance analysis is a fundamental point for design enginneers in performing tolerance studies and optimising tolerance budgets. Some tools already exist and use generally 5 steps:

- Creation of the design
- Definition of functional features for each component
- Verification of the functional features for each element
- Creation of the functional assembly model
- Performance of the functional features analysis of the assembly

Functional features are defined and related to one another according to the Geometric Dimensioning and Tolerancing (GD&T) Datum references and feature control constraints (i.e. form, orientation, location...).
PMIs are also fundamental because they are the basis of all this study.
PMIs in 3D viewing will be a tool that helps the user of this analysis to have directly the PMIs information in 3D models in early phases. In future, it is possible to imagine a tool that allows to perform the tolerance analysis directly from a 3D model in DMU with PMIs.

CONCLUSION

The creation and use of PMIs in 3D models are a field of developpment. The CAD systems propose some interesting solutions but they are not yet adapted for collaborative engineering: the CAD systems are built and used for and by designers.
In a collaborative engineering context, the use of DMU and in particular PMIs in DMU are fundamental points. PMIs drive different technical or non-technical activities like design, manufacturing, planning or maintenance. Therefore, there is a need that PMI has to meet the specific needs of the different users during the PCP: a PMI has not exactly the same meaning for a designer, a production planner or a quality engineer.
As a consequence, PMI in a future 3D viewing system has to be clever, helpful and adapted during each phase of the collaborative engineering process for each user.
PMIs have also a fundamental role in some aspects of simulation. In NC-simulation, finite element analysis and statistic tolerance, PMIs have directly or indirectly influences in the results of simulations.
The next steps of this research is to identify clearly the needs of each members of the team and to define a protocol for the use of PMIs in 3D viewing.

REFERENCES

F. L. Krause and G. Seliger, "Life Cycle Networks", Proceedings of the 4th CIRP International Seminar on Life Cycle Engineering (26-27 June 1997, Berlin, Germany)

Schichtel Markus (2002), "Produktdaten-modellierung in der Praxis"

Schiemenz, K.; Sorito, R. 2001: DMU mit Zulieferern - Stategiearbeitsgruppe der deutschen Automobilindustrie. DMU Workshop, ProSTEP, Darmstadt

Schlederer, M.; Sorito, R., 2001: Firmenübergreifende Zusammenarbeit - Nutzen und technische Machbarkeit mit Praxisbeispiel einer Kooperation zwischen BMW und Bosch. IIR Konferenz, Stuttgart

Bögershausen, F.; Schiemenz K., 2000: DMU in extended enterprise - Cooperative product development with suppliers. ECEC 2000, Leicester.

Holland, M.; Plischke, D., 2001: Handbuch Kooperationsmodelle, Datenlogistik.VDA AG Kooperationsmodelle - Datenlogistik

VDA-AK "CAD/CAM", 2001: VDA - Empfehlung 4961/2, Kooperationsmodelle und SE Checkliste zur Abstimmung der Datenlogistik in SE-Projekten. Im Genehmisverfahren.

Le Hen, G.; 2002: " 3D Visualization: a cornerstone for a collaborative product creation process ?" 9th international product development management conference, Sophia Antipolis, France

Andre, P.; 2000 "Industrialisation d´un lot de chapeaux palier arbre à cames" -intership report- University of Valenciennes, France