PREDICTIVE VERSUS VECTOR CONTROL OF THE INDUCTION MOTOR

Sergiu Ivanov
Virginia Ivanov

Vladimir Rasvan
Eugen Bobasu
Dan Popescu
Florin Stinga

University of Craiova
Faculty of Electrical Engineering
Faculty of Automation, Computer and Electronics
107 Decebal Blv., 200440, Craiova, Romania
E-mail: sivanov@em.ucv.ro, vivanov@elth.ucv.ro
E-mail: [vrasvan, ebobasu, dpopescu, florin]@automation.ucv.ro

KEYWORDS
Induction motor, vector control, predictive control.

ABSTRACT

The paper deals with the vector control and predictive control of the induction motor. For the vector control, the rotor flux oriented one is pointed out, with highlight on the voltage source inverter type. The influence of the most important parameter variations (e.g. stator resistance) is discussed. A simple (and practical) method for avoiding these influences is presented, based on proper simulation models. Following the basics of the predictive control, a simulation model for this type of command is presented, together with simulations results. Finally, the results are cross analysed and further actions are proposed the work continuation.

INTRODUCTION

On one hand, since the basic work concerning torque and field control due to Leonhard, Blaschke and their followers in the 1970s, the AC drives became a competitive technology with respect to the traditional one, based on DC drives. In rotating references, solidar with the rotor flux, stator flux or magnetizing flux respectively, there is an obvious decoupling between the two components of the stator current: while the direct component acts on the flux modulus only and produces the reactive component, the quadrature component generates the torque, being the active component. The two components of the stator current may be thus controlled independently and the flux and torque generation are thus decoupled, similarly to the DC motor. Due to results simplicity, the rotor flux orriented control has imposed almost as a standard. From here, two types of control were engineered. On one hand we have the direct control drives, where flux position and modulus are known while the reactive and active components of the stator current are computed in the proper reference frame using the set-point torque and flux. On the other hand we have the indirect control drives, where the slip frequency is computed and imposed without direct knowledge of the flux, while the reference system change from the flux-reference to stator-reference one is performed by integration of the sum of the motor speed and the speed corresponding to the computed slip (Casadei et al. 2002, Vas 1998). A very simple method for the toque control is also the Direct Torque Control (DTC), suited for electrical traction applications (Takahashi and Noguchi 1986, Baader et al. 1992, Ehsani et al. 1997, Faiz et al. 1999, Haddoun et al. 2007, Ivanov 2009, Ivanov 2010).

On the other hand, the increased computational capabilities of the existing DSP allow the implementation of the predictive control at the level of the converters which induce the hybrid character of the overall control system of the drive. We infer that predictive control has established itself in the last 5-7 years as a very proficient form of controlling highly nonlinear and uncertain systems; moreover the most recent results show its applicability to fast processes among which drives and their converters have a central position (Seo et al. 2009, Prieur and Tarbouriech 2011, Geyer et al. 2008, Mariethoz et al. 2010, Geyer et al. 2009, Trabelsi et al. 2008, Shi et al. 2007, Rodriguez et al. 2007, Larrinaga et al. 2007, Richter et al. 2010, Almer et al. 2010).

The paper will briefly present in the first section the basics of the vector control for the rotor flux oriented control for voltage source inverter, with highlight on the influence of the parameters variations on the drive performance. A simple method for reducing these influences will be discussed based on appropriated models. The basics of the predictive control will be presented in Section 2. Section 3 will analyse the predictive control applied to the induction motor, based also on a Simulink model. Finally, conclusions will be issued and ideas for continuation will be pointed out.

VECTOR CONTROL OF INDUCTION MOTOR

As stated above, the vector control strategy most often used is the rotor flux oriented one. The reasons reside in the simplicity of the expressions resulted from the *rotor* voltage equation which mainly gives the rotor flux speed and further, by integration, the rotor flux position, used

Proceedings 27th European Conference on Modelling and Simulation ©ECMS Webjørn Rekdalsbakken, Robin T. Bye, Houxiang Zhang (Editors)
ISBN: 978-0-9564944-6-7 / ISBN: 978-0-9564944-7-4 (CD)

at its turn for the transformation of the reference currents/voltages from the rotary frame to the stationary one.

For the squirrel cage induction motor, the rotor voltages equation in terms of phasors is

$$0 = R_r \underline{i}_{r\Psi r} + \frac{d\underline{\Psi}_{r\Psi r}}{dt} + j\left(\omega_{mr} - P\omega_r\right)\underline{\Psi}_{r\Psi r}, \qquad (1)$$

where R_r is the rotor resistance, $\underline{i}_{r\Psi r}$ is the rotor current, ω_m is the rotor flux speed, ω is the mechanical speed of the rotor and P is the number of pairs of poles. The Ψ subscript highlights that (1) is expressed in the rotary frame synchronous with the rotor flux $\underline{\Psi}_{r\Psi r}$.

By assuming unsaturated operation (realistic hypothesis when the stator currents are precisely controlled), the rotor flux expressed in terms of magnetizing inductance L_m and rotor magnetizing current $\left|\underline{i}_{mr}\right|$ is $\left|\underline{\Psi}_r\right| = L_m \cdot \left|\underline{i}_{mr}\right|$

Consequently, (1) becomes

$$0 = R_r \underline{i}_{r\Psi r} + L_m \frac{d\left|\underline{i}_{mr}\right|}{dt} + j\left(\omega_{mr} - P\omega_r\right)\cdot\left|\underline{i}_{mr}\right|\cdot L_m. \qquad (2)$$

The rotor current $\underline{i}_{r\Psi r}$, being immeasurable for the squirrel cage motor, is expressed in terms of the stator current $\underline{i}_{s\Psi r}$ and the magnetizing one. By denoting the rotor time constant $T_r = L_r / R_r$, (2) becomes

$$T_r \frac{d\left|\underline{i}_{mr}\right|}{dt} + \left|\underline{i}_{mr}\right| = \underline{i}_{s\Psi r} - j\left(\omega_{mr} - P\omega_r\right)T_r\left|\underline{i}_{mr}\right|, \qquad (3)$$

L_r being the total rotor inductance which includes the leakages ($L_r = L_m + L_{\sigma r}$). By identifying the terms on each of the axes d, q, the following two expressions result which are the simplest among all the vector control types

$$T_r \frac{d\left|\underline{i}_{mr}\right|}{dt} + \left|\underline{i}_{mr}\right| = i_{sd}, \qquad (4)$$

$$\omega_{mr} = P\omega_r + \frac{i_{sq}}{T_r\left|\underline{i}_{mr}\right|}. \qquad (5)$$

We notice from (4) that if the flux is kept constant ($\left|\underline{i}_{mr}\right| = \text{ct.}$), then $\left|\underline{i}_{mr}\right| = i_{sd} = \text{ct.}$ As the electromagnetic torque expressed in the rotor flux oriented frame is

$$t_e = \frac{3}{2} P \frac{L_m^2}{L_r} i_{sd} \cdot i_{sq}, \qquad (6)$$

from (5) and (6) results that the slip speed (term 2 in (5)) is proportional with the torque and further, the mechanical characteristic of the induction motor are straight lines, quite similar to the DC motor.

When the motor is supplied by a voltage source inverter, the necessary voltages are obtained by considering the *stator* voltages equation expressed in the same rotary frame synchronous with the rotor flux $\underline{\Psi}_{r\Psi r}$:

$$\begin{aligned}\underline{u}_{s\Psi r} &= R_s \underline{i}_{s\Psi r} + L_s \frac{d\underline{i}_{s\Psi r}}{dt} + L_m \frac{d\underline{i}_{r\Psi r}}{dt} + \\ &+ j\omega_{mr} L_s \underline{i}_{s\Psi r} + j\omega_r L_m \underline{i}_{r\Psi r}\end{aligned}. \qquad (7)$$

where R_s is the stator resistance, $\underline{i}_{s\Psi r}$ is the stator current and L_s is the total stator inductance which includes the leakages ($L_s = L_m + L_{\sigma s}$).

By expressing the rotor current in terms of the stator current and the magnetizing one and denoting the stator time constant $T_s = L_s / R_s$, stator transient time constant $T_s' = L_s' / R_s$, with $L_s' = L_s - \frac{L_m^2}{L_r}$ stator transient inductance, it results from (7) the two necessary voltages

$$u_{sd} = R_s i_{sd} + L_s' \frac{di_{sd}}{dt} - \omega_{mr} L_s' i_{sq} + \left(L_s - L_s'\right)\cdot\frac{d\left|\underline{i}_{mr}\right|}{dt}, \qquad (8)$$

$$u_{sq} = R_s i_{sq} + L_s' \frac{di_{sq}}{dt} + \omega_{mr} L_s' i_{sd} + \left(L_s - L_s'\right)\cdot\omega_{mr}\left|\underline{i}_{mr}\right|. \qquad (9)$$

We notice from (8) and (9) that the two expressions are not independent. By assuming some hypothesis ($\left|\underline{i}_{mr}\right| = i_{sd} = \text{ct.}$, $i_{sq} = \text{ct.}$), result simplified expressions of the preset voltages in terms of the preset values of the two stator current components (reactive i_{sd}^* and active one i_{sq}^* respectively)

$$u_{sd}^* = R_s i_{sd}^* - \omega_{mr} L_s' i_{sq}^*, \qquad (10)$$

$$u_{sq}^* = R_s i_{sq}^* + \omega_{mr} L_s i_{sd}^*. \qquad (11)$$

The second term of each equation will determine the structure of the so called decoupling circuit (Fig. 1).

Results of the simulation of step start followed by a speed reversal are plotted in Fig. 2. Even there are some transients when the speed reference changes, the overall behaviour is good.

In simulation everything seems to be perfect. In practice, the decoupling circuit raises two problems. On one hand, by considering only the value of the stator resistance in (10) and (11), the "parasitic" voltage drops (on semiconductors, cables, DC circuit in high dynamics) are neglected. The consequences are evident on the final currents. Fig. 3.a plots the reactive and active currents obtained by experiment.

We notice that the both currents do not follow the preset values and consequently, the torque is about one half of the expected one.

Experimentally increasing the value of the resistance used in (10) and (11), the two currents reach the preset values (Fig. 3.b) and the developed torque attains the expected value. But these results are obtained with a value of the stator resistance double that in previous case.

This observation raises another question: what happens in practice when the real resistance of the motor changes (increases) during the operation due to the temperature.

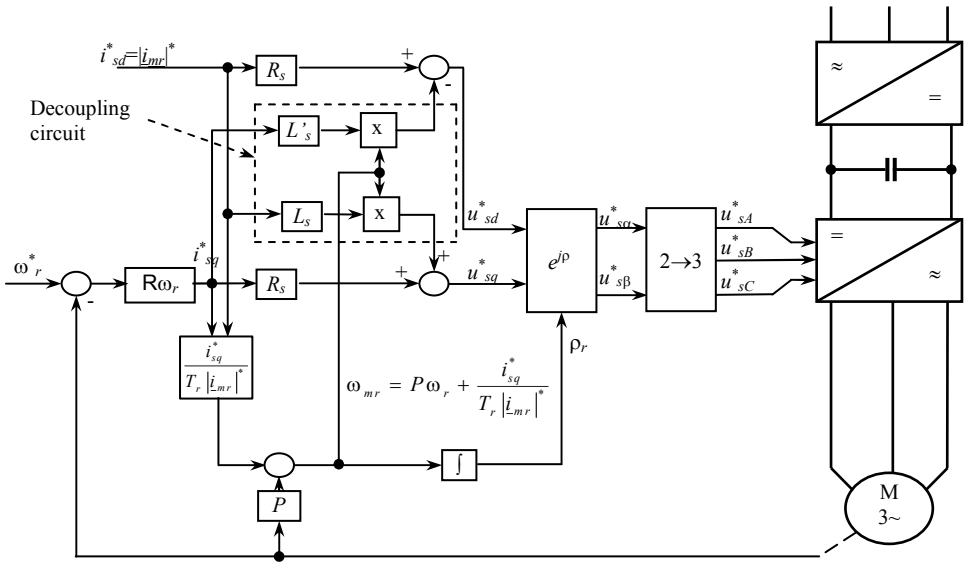

Figure 1: Rotor Flux Oriented Control of the Induction Motor Supplied by Voltage Source Inverter

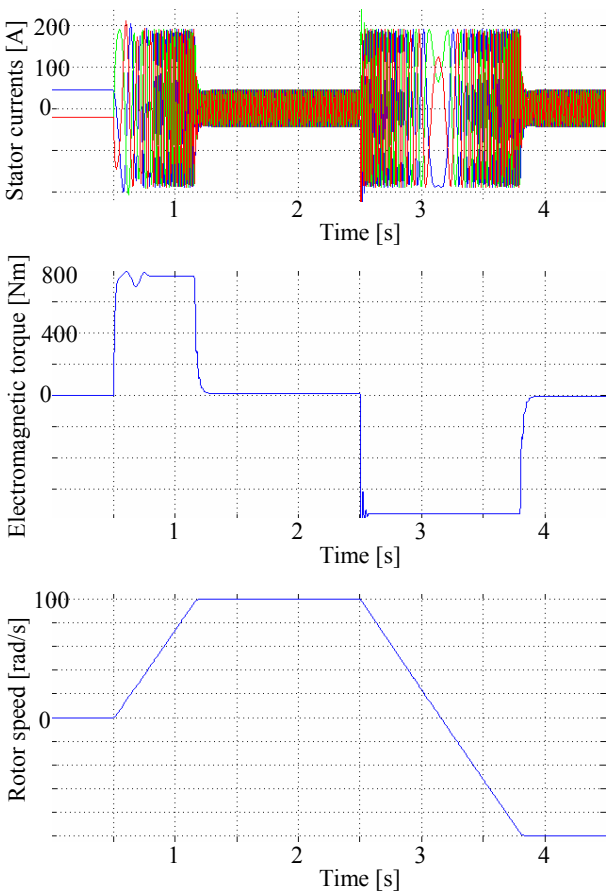

Figure 2: Simulation of the Classic Rotor Flux Oriented Control of the Induction Motor Supplied by Voltage Source Inverter

The expected results could be the same if the decoupling circuit does not adapt itself.
In practice, the decoupling circuit is replaced by two controllers, one for each component of the stator current, Fig. 4.

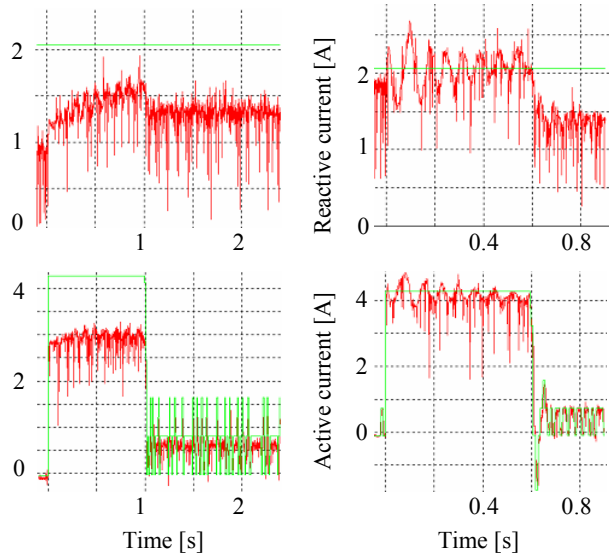

a) R_s b) $2R_s$

Figure 3: Experimental Results with Two Values of the Stator Resistance

In addition, the flux speed and position are computed based on the real values of the two components of the stator current, not the reference ones as in previous case. The results of the simulation, plotted in Fig. 5 look even better. There are not transients when the speed reference changes.
This is the type of control industrially implemented, for example in the dsPIC30F from Microchip.
By using in the motor model different values of the stator resistance (alteration due to the temperature for example), the results do not change almost at all. This observation leads to the conclusion that this type of control is much less sensitive to the parameters' variations.

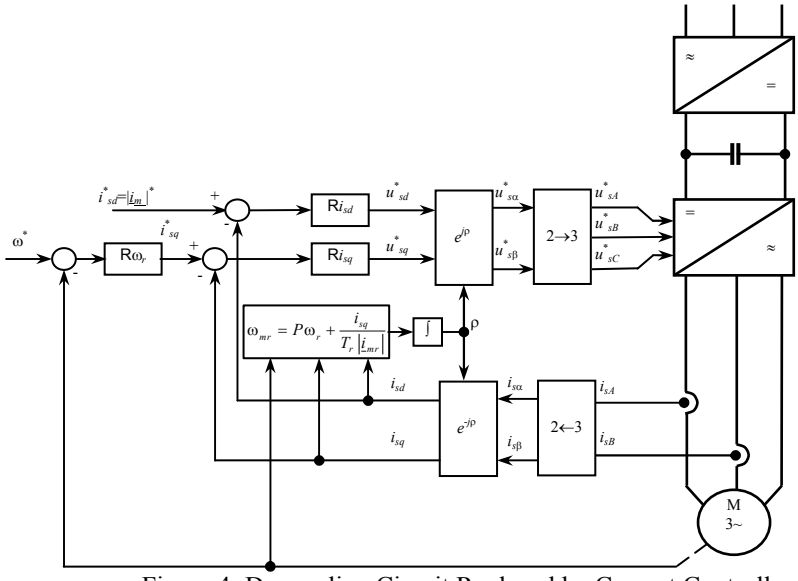

Figure 4: Decoupling Circuit Replaced by Current Controllers

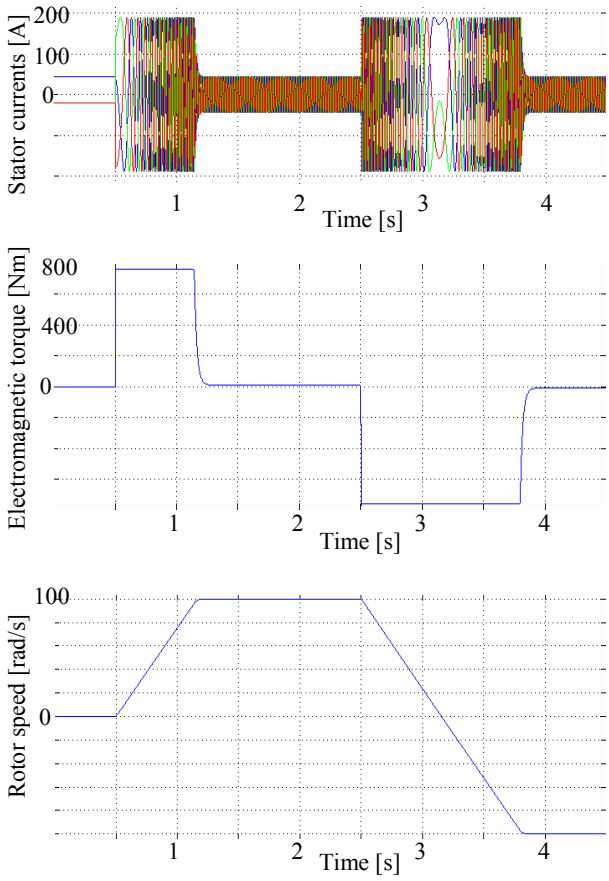

Figure 5: Simulation of the Rotor Flux Oriented Control with Current Controllers

BASICS OF PREDICTIVE CONTROL

The model predictive control is a control technique which has been successfully implemented in industry. The predictive control techniques were used to control both continuous as well as discrete systems (Camacho and Bordons 2004, Bemporad 2007, Lazăr 2006, Maciejowski 2000, Stinga 2012).

The predictive control is derived from optimal control, yet, in this case the optimal control problem involves additional constraints.

The predictive control techniques require solving an open loop optimal control problem, taking into account constraints on input, state and/or output variables. At every moment k, the measured variables and the model of the process are used to compute (to predict) the future behaviour of the system over a prediction horizon N (Fig. 6).

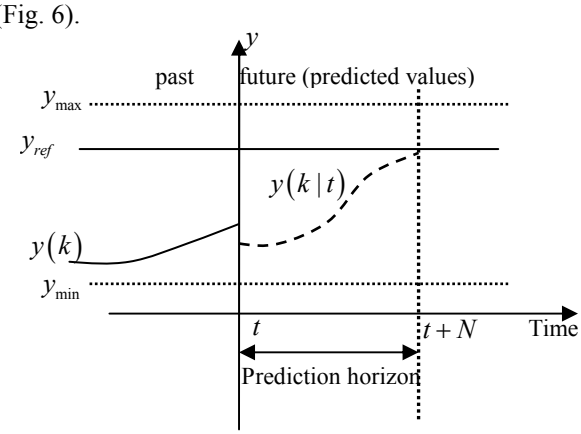

Figure 6: Evolution of System Output Using Predictive Control Strategy (Stinga 2012)

This task is accomplished by determining a set of future control inputs such that the objectives and the system constraints are satisfied. The control input is determined by minimization of a cost function over a time horizon N_c.

Generally, the cost function used in predictive control is defined as follows:

$$J(k) = \sum_{t=1}^{N} \left\| y(k|t) - y_{ref}(k) \right\|_{Q(t)}^{2} + \sum_{t=1}^{N_c} \left\| u(k|t) \right\|_{R(t)}^{2}, \quad (12)$$

subject to constraints specified on the inputs, outputs and input increments (Fig. 7):

$$u_{\min} \le u(k) \le u_{\max} ,$$
$$y_{\min} \le y(k) \le y_{\max} ,$$

where:
$Q(t)$ - positive definite error weighting matrix;
$R(t)$ - positive semi-definite control weighting matrix;
$y(k|t)$ - vector of predicted output signals;
$y_{ref}(k)$ - vector of future set points;
$u(k|t)$ - vector of future control inputs;
N - prediction horizon;
N_c - control horizon.

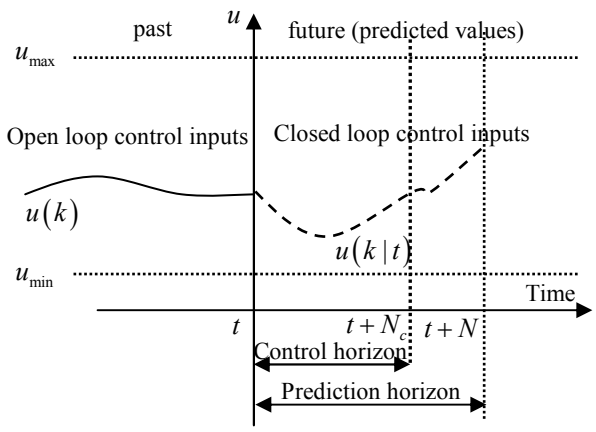

Figure 7: The Control Inputs Applied to the System Using the Predictive Control Strategy (Stinga 2012)

PREDICTIVE CONTROL OF THE INDUCTION MOTOR

The model is based on the ideas presented in Merabet 2012. The model of the motor is written in the stationary frame (α, β), in terms of stator currents and rotor flux. The outputs chosen to be controlled are the mechanical speed and the modulus of the rotor flux.
The control diagram uses a state observer based on the motor model, adjustable on basis of stator currents errors. It results the sensorless diagram depicted in Fig. 8.

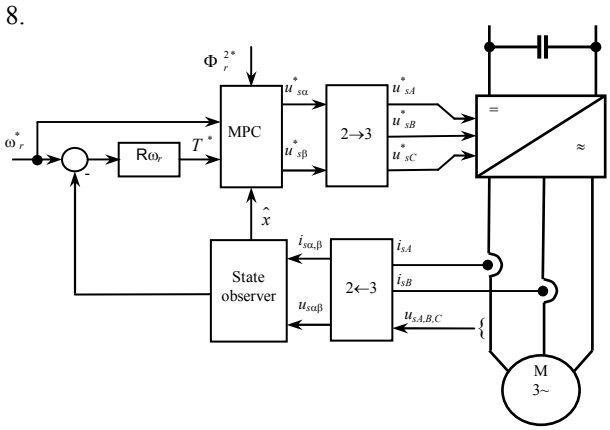

Figure 8: The Control Diagram of the Sensorless Predictive Control

The simulation of the control system for the same operation as in Fig. 2 and 5 determined the evolutions plotted in Fig. 9. This time, the currents plot displays the (α, β) components.

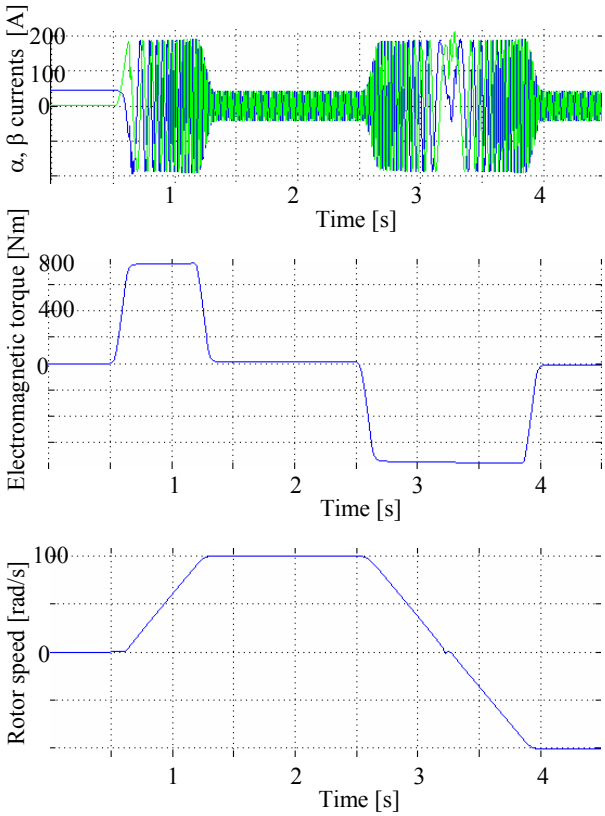

Figure 9: Simulation of the Sensorless Predictive Control of the Induction Motor

It is noticed that the general behaviour of the drive keeps good shapes for the plotted signals.

CONCLUSIONS

The paper describes some control possibilities for the induction motor. The rotor flux vector control is analysed and the influence of the stator resistance variance is discussed. A control diagram which avoids the effects of these variations is presented and simulated. The results plotted in Fig. 5 emphasis good dynamic behaviour. For the considered motor (55 kW), the acceleration time up to the rated speed is only 0.65 seconds. Further, the model predictive control of the induction motor is analysed. The goal of the research is to implement the predictive control for an industrial drive which will be offered on the market. The results of the simulation, presented in Fig. 9 highlight the behaviour of the drive. The dynamic performances are slightly reduced (acceleration time 0.8 seconds), but the advantages of the sensorless control must be underlined.
Further research will be focused both on the improvement of the dynamic performances and on the stability study and immunity to the parameters variations.

ACKNOWLEDGMENTS

Authors whish to thank the UEFISCDI and their partners in the HYDICO project (PN-II-PT-PCCA-2011-3.2-1082), in the frame of which their study has been performed.

REFERENCES

Almer S. et al. 2010. "Piecewise Affine Modeling and Control of a Step-Up DC-DC Converter". *American Control Conference Paper* ThB05.3.

Baader U., Depenbrock M., Gierse G. 1992. "Direct self control (DSC) of inverter-fed induction machine: a basis for speed control without speed measurement". In *IEEE Transactions on Industrial Applications*, vol. 28, pp. 581–588.

Casadei D., Profumo F., Serra G., Tani A. 2002. "FOC and DTC: Two Viable Schemes for Induction Motors Torque Control", In *IEEE Trans. Power Electronics*, Vol. 17, nr.5.

Ehsani M. et al. 1997. "Propulsion system design of electric and hybrid vehicles". In *IEEE Trans. Industrial Electronics*, vol. 45, nr.1, pp 19-27.

Faiz J. et al. 1999. "Direct torque control of induction motor for electric propulsion systems," In *International Journal on Power Systems*, vol. 51, pp. 95–101.

Geyer T. et al. 2008. "Hybrid Model Predictive Control of the Step Down DC-DC Converter". In *IEEE Trans. Contr. Syst. Technol*. Vol. 16, no.6, pp. 1112-1124.

Geyer T. et al. 2009. "Model Predictive Direct Torque Control—Part I: Concept, Algorithm, and Analysis". In *IEEE Transactions on Industrial Electronics*. Vol. 56, no.6, pp. 1894-1905.

Haddoun A., Benbouzid M., Dialo D., Abdessemed R., Ghouili J., Srairi K. 2007. "A loss-minimization DTC Scheme for EV Induction Motor" In *IEEE Transactions on vehicle technology*, vol.56, nr.1, pp.81-88.

Ivanov, S. 2009. "The influence of the sampling period on the performance of the regulation by DTC of the induction motor". In *Proceedings of the 23rd European Conference on Modelling and Simulation*, Madrid, Spain, 776-780.

Ivanov, S., 2010. "Continuous DTC of the Induction Motor". In *Advances in Electrical and Computer Engineering*, vol. 10, no. 4, 149-154. (http://dx.doi.org/10.4316/AECE.2010.04024).

Larrinaga S.A. et al. 2007. "Predictive Control Strategy for DC/AC Converters Based on Direct Power Control". In *IEEE Trans. Ind. Electronics*. Vol. 54, no.3, pp. 1261-1270.

Mariethoz S. et al. 2010. "Comparison of Hybrid Control Techniques for Buck and Boost DC-DC Converters". In *IEEE Trans. Contr. Syst. Technol*. Vol. 18, no.5, pp. 1126-1145.

Merabet A. 2012. "*Nonlinear model predictive control for induction motor drive*" – chapter in "Frontiers of Model Predictive Control", edited by Zheng, T, Intechweb.org, pp. 109-130.

Prieur C. and Tarbouriech S. 2011. "New directions in hybrid control systems" (editorial). In *Int. Journal Robust Nonlin. Control*. Vol. 21, pp. 1063-1065.

Richter S. et al. 2010. "High-Speed Online MPC Based on a Fast Gradient Method Applied to Power Converter Control". *American Control Conference Paper* FrA01.6.

Rodriguez J. et al. 2007. "Predictive Current Control of a Voltage Source Inverter". In *IEEE Trans. Ind. Electronics*. Vol. 54, no.1, pp. 495-503.

Seo S. et al. 2009. "Hybrid Control System for Managing Voltage and Reactive Power". *In the JEJU Power System, Journal of Electrical Eng. and Technol*. Vol. 4, no.4 pp. 429-437.

Shi X.L. et al. 2007. "Implementation of Hybrid Control for Motor Drives". In *IEEE Trans. Ind. Electronics*. Vol. 54, no. 4, pp. 1946-1952.

Takahashi I. and Noguchi T. 1986. "A new quick-response and high efficiency control strategy of an induction motor". In *IEEE Transactions on Industrial Applications*. vol. IA-22, no.5, pp. 820-827.

Trabelsi M. et al. 2008. "Hybrid Control of a Three-Cell Converter Associated to an Inductive Load". *IEEE paper* 978-1-4244-1668-4/08.

Vas P. 1998. *Sensorless Vector and Direct Torque Control*. Clarendon Press, Oxford.

Camacho E.F. and Bordons C. 2004. *Model predictive control*. Springer-Verlag.

Bemporad A. 2007. *Model predictive control of hybrid systems*, 2nd HYCON PhD. School on Hybrid Systems, Siena.

Lazăr M. 2006. *Model Predictive Control of Hybrid Systems: Stability and Robustness*, Ph.D. Thesis, Eindhoven, Holland.

Maciejowski J.M. 2000. *Predictive control with constraints*, Prentince Hall.

Stinga F. 2012. *Control strategies for hybrid systems. Applications*, Ph.D. Thesis, Craiova, Romania.

AUTHOR BIOGRAPHIES

SERGIU IVANOV was born in Hunedoara, Romania and went to the University of Craiova, where he studied electrical engineering. He obtained his degree in 1986. He worked for the Institute for Research in Motors, Transformers and Electrical Equipment Craiova before moving in 1991 to the University of Craiova. He obtained his PhD in 1998 with a topic in the field of the control of the electric drives systems. He is involved in modelling of the electromechanical systems.

VLADIMIR RASVAN graduated from the Polytechnic Institute of Bucharest, Romania in 1967 (Automatic Control) and obtained his Ph.D. in System Theory in 1972. After a 10 years career in applied research for control in Power systems, he became an associate professor (1982) and eventually professor (1990) at the University of Craiova. His main scientific interests are in mathematical approaches for dynamics in engineering systems. He is author of 7 books and some 200 papers published in scientific journals and proceedings of scientific/technical conferences.

EUGEN BOBAŞU received the B.S. and M.Sc. degrees (1977), both in automatic control, and the Ph.D. degree in control

systems (1997) from the University of Craiova, Romania. Since 1981 he is with the University of Craiova, where he is currently Professor in the Department of Automatic Control.
He is involved in national and international research projects in the field of modelling, identification and hydraulics. His present research interests are on modelling of complex systems and identification of nonlinear systems. He has published more than 90 journal and conference papers, and he is author or co-author of 5 books.
Prof. Bobaşu is member of IEEE, SRAIT and of ARR.

DAN POPESCU received the B.S. and M.Sc. degrees (1977), both in automatic control, and the Ph.D. degree in control systems (1997) from the University of Craiova, Romania. Since 1981 he is with the University of Craiova, where he is currently Professor in the Department of Automation, Electronics and Mechatronics. His present research interests are on robust control, time delay systems and predictive control. Prof. POPESCU is member of IEEE and IFAC TC 2.5 “Robust Control”.

FLORIN STINGA was born in Craiova, Romania. He received the B. Eng., M.S. and Ph.D. degrees in system engineering, all from University of Craiova, in 2000, 2003 and 2012. Currently, he is Assistant Professor in the Department of Automation, Electronics and Mechatronics at the Faculty of Automation, Computers and Electronics, Craiova. His researches interested are in hybrid dynamical systems and embedded systems.

VIRGINIA IVANOV was born in Vela, Dolj, Romania, 1963. She was graduated in Electrical Engineering at University of Craiova, Romania, in 1986 and Doctor in Electrical Engineering in 2004. From 1986 to 1998 she worked as researcher with the Researching Institute for Motors, Transformers and Electric Equipment Craiova. In 1998 she joined the Faculty for Electrical Engineering, Department of Electrical Equipment and technologies.