ALGORITHMIC AUTONOMY ARCHITECTURE (AAA) – THE PRINCIPLES OF BUILDING INFORMATION SYSTEMS WITH APPLICATIONS IN SIMULATION AND EDUCATION

Dr. Janis Sedols
Research Institute of Mathematics and Computer Science, University of Latvia
Rainis boulvd. 29, Riga LV-1459, Latvia
E-mail: sedols@cclu.lv

Sniedze Sedola
SWH SETS
Antonijas str. 8, Riga LV-1010, Latvia
E-mail: Sniedze.Sedola@sets.lv

KEYWORDS

Algorithm, autonomy, architecture, information system, education, program, model, simulation, geography, game, center.

ABSTRACT

The principles of building information systems are considered which has emerged from practical experience developing applications for simulation and education. The principles are directed to increase the to increase stability of the IS, to improve data exchange between users and to rise creativity. The short report is presented on already completed systems based on these principles – simulation system SITA and geographical game EARTH. The brief description is given of the theory called centristics which originated from game EARTH and deals with centers of geographical areas.

INTRODUCTION

The main use of a computer is working with or building an information system (IS) consisting of programs, data and documents. Thus, to solve a problem using simulation one takes a simulation program, builds some models, gets results (data) from them and includes these in the text of a document, for example, a report or a scientific paper. The entirety of all this can be called information system involved in the particular work.

The principles of building IS called Algorithmic Autonomy Architecture (AAA) which will be discussed below are directed to increase stability of the IS, to improve data exchange between users and to motivate creative work with a computer. The principles emerged from practical experience working with computers and by summing up methods of building software from different sources. The most of the principles are not very original by themselves, but they have not been integrated in one common system.

These principles of AAA are practically applied and tried in building IS in areas of simulation and education. The examples are simulation system SITA and geographical game EARTH

PROPOSALS

The structure of blocks. An IS consists of relatively independent parts called blocks. Blocks can be combined in different ways making optimal IS for the particular situation. Every block belongs to one of two categories – the programs or P-blocks and the data or D-blocks. The P-blocks contains programs and their descriptions, the D-blocks – the data sets for specific needs created and processed by core programs. The stability of the IS is heavily based on interaction of two categories – a solid core produces a vast number of D-blocks, which in turn makes it necessary to improve the P-blocks regularly.

The link between programs and textual information. The textual material of an IS can belong to either P-blocks (the user guides for programs) or the D-blocks (the information about specific application). Programs and texts can be separated or subject to one

Proceedings 19th European Conference on Modelling and Simulation
Yuri Merkuryev, Richard Zobel, Eugène Kerckhoffs © ECMS, 2005
ISBN 1-84233-112-4 (Set) / ISBN 1-84233-113-2 (CD)

another both ways – you can invoke texts from a program (help) or contribute texts with an option to run the programs mentioned within (executable hyperlinks). AAA provides both opportunities. Programs can access help, D-blocks can contain texts with executable hyperlinks, but the program Prologue described next gives opportunity to run programs or to read texts. Besides AAA has its own text formatting which makes them easy to use everywhere as well as publish in the Internet.

Manager program Prologue. The manager program Prologue makes IS very easy to use. It shows the structure if the IS and provides access to all its components. In Prologue you can run programs, open documents for reading and choose the necessary blocks from lists. The Prologue contains language options mentioned below. The Prologue is common for all types of IS that belong to AAA.

The language options. AAA makes localization of existing IS for use in different languages rather simple. You have to translate documents and program text resources which are extracted in separate files. If IS has more than one language, you can choose a working language from list in Prologue.

Raising creativity. The principles of AAA encourage the user not only to use the IS but also to participate in development. The simplest way of doing this would be building an IS from readymade blocks. The next step is making new D-blocks or expanding existing ones. Rather simple is changing documents in P-blocks, which can be improved and enhanced as well as translated to different language. Qualified users can also make new P-block for existing or new work areas.

IMPLEMENTATIONS

Currently there are two classes or spheres of IS based on principles of AAA – **simulation system SITA** and **geographical game EARTH**. The third sphere is AAA itself which encapsulate other spheres. Further wee will briefly discuss each sphere separately.

SPHERE AAA

AAA includes programs for common usage – aforementioned program Prolog, launching program Start and installer program which sets up AAA from a CD to user's PC. Program Start is necessary to launch Prolog from different locations in different modes. Start also registers blocks which is necessary when the block is added or relocated to ensure the interaction between blocks.

The two variations of the Prologue window for respective spheres SITA and EARTH are shown in Figure1. On the left side of the window you can see lists where you can choose the language, the D-block you want to work with called group and subordinate D-block called field. In our case group SITA2000 contains only one field with the same name, on the other hand group "EARTH, World-Europe" has two fields WORLD and EUROPE. Every group with all its fields belongs to one of spheres.

On the right side of the Prologue window there are pushbuttons for executing programs and reading documents. The former are located on the right side within the frame with the current field name in the title. The left sides of pushbuttons for document reading make a vertical line almost in the middle of the window. A button with title "What is…" gives an abstract of the given sphere, Help gives information about the usage of Prologue, buttons with character "i" next to the program icons – about the usage of respective programs. The button at the bottom on the frame gives information about the chosen field. In the case of SITA it opens the book where the teaching aid and scientific research concerning this system are assembled. The solitary button "Go" on the left side of the window is a convenient shortcut for the top program button which is most commonly used. There is also checkbox "AAA info" in the Prologue windows. It switches the program to the state where the information is available about the AAA itself and the spheres in it.

SIMULATION SYSTEM SITA

Statistical and analytical simulation system SITA (Janis Sedols and Madars Rikards, 2003) is intended for making and using graphic models a.k.a. charts. The example of a chart – model of the telecommunication system with repeated calls caused by the busy subscribers (Gerards Jonins and Janis Sedols, 2001) – is shown in Figure2. The full information of the model is displayed including short textual description. Using chart you can do statistical and analytical simulation and obtain the results from given data.

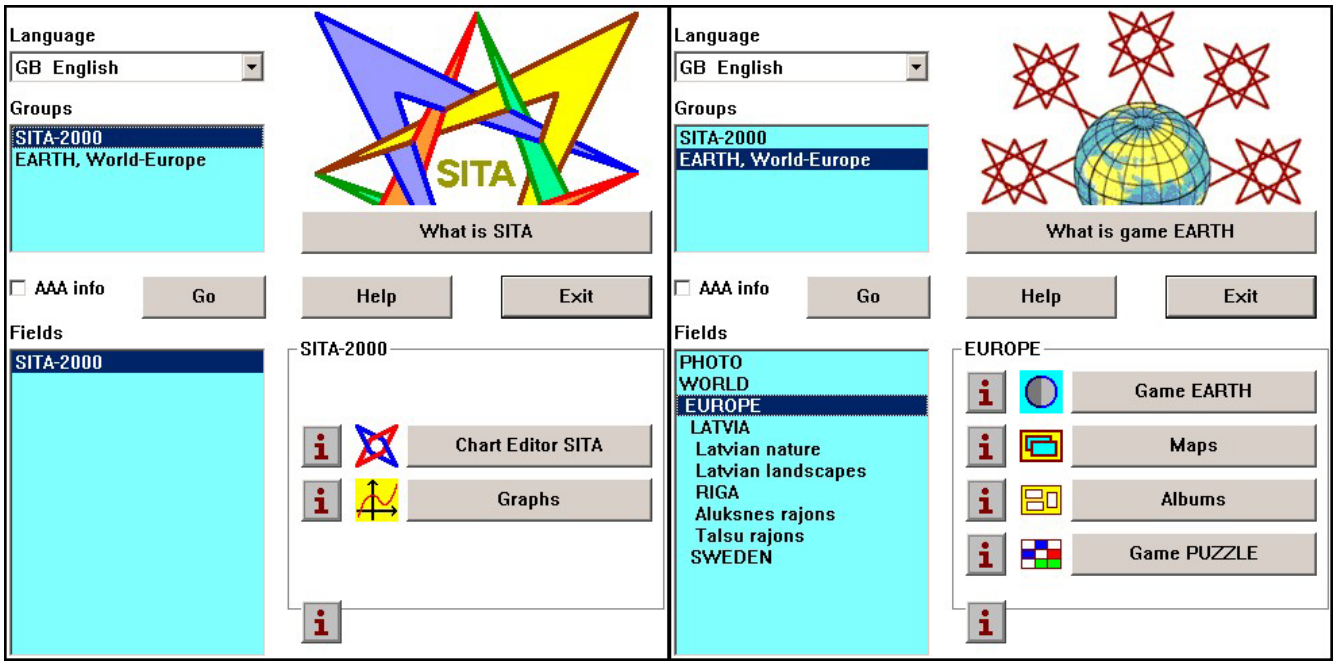

Figure 1. Prologue

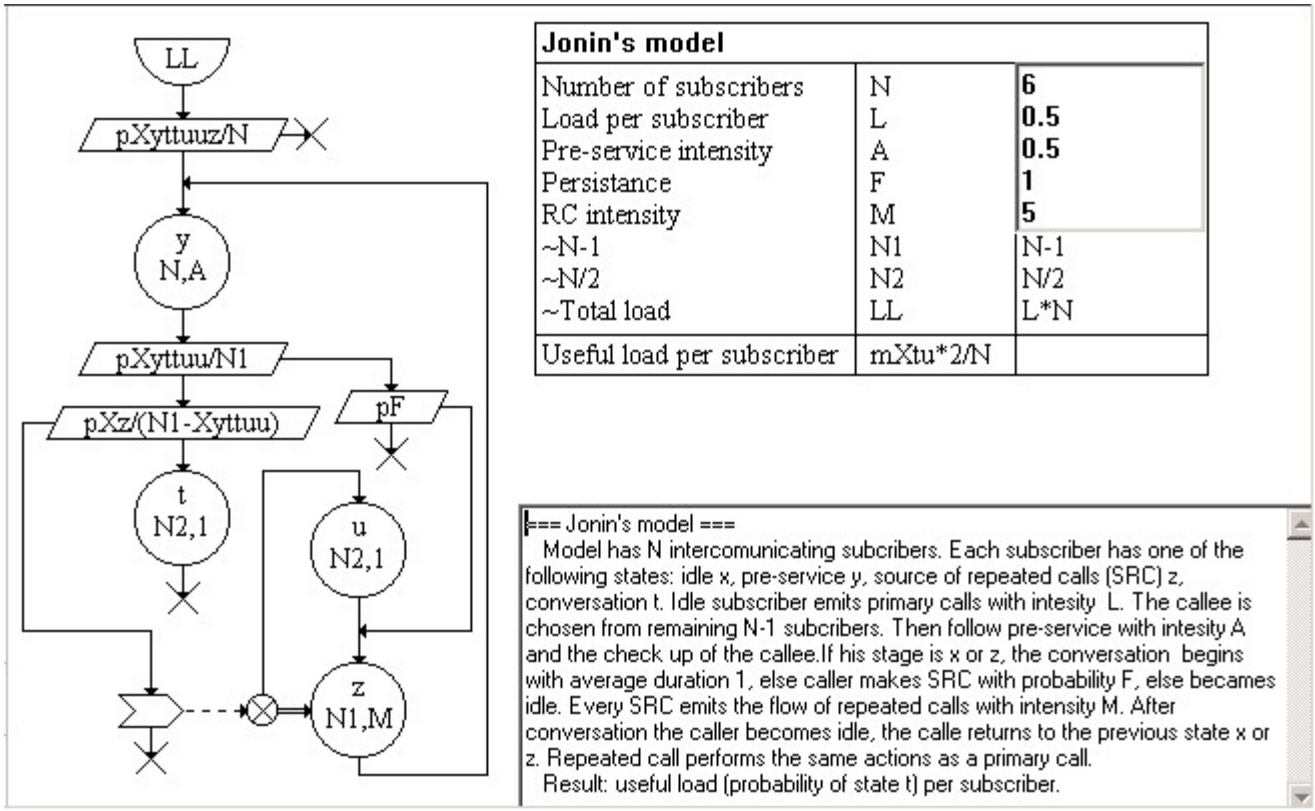

Figure 2. Example of model in system SITA

To make the example more comprehensible let us inspect it more closely. The model of communication system with finite number of subscribers and repeated calls is an example of scientific research using SITA. The model is named after one of its authors Gerards Jonins (1938 – 2001). The model is interesting because the overload phenomena can be observed – when increasing intensity of incoming flow of calls the useful or serviced load at first increases but then starts to decrease. The cause of overload is useless load which originates from pre-service needed to identify the subscriber to call. When the load is great almost all the subscribers are engaged in this phase and cannot reach the communication phase. The result of the research is effective and rather simple method to avoid overload, which briefly is this – the optimum load is calculated and it is not allowed to overreach it by denying new calls at the moments of overload.

SITA is very suitable for educational purposes due to simplicity and demonstrability. It can be used not only for modeling programs but also to make **flowcharts of numerical algorithms**. The both kinds of charts can be executed in **trace mode** which shows step by step the work of the model or running the algorithm. SITA contains the program for drawing diagrams which presents the results of modeling or calculation in the form of a graph.

GEOGRAPHICAL GAME EARTH

The game EARTH is the second example of educational IS. It contains instruments to build and use a game field for any geographical territory.

A game about a geographical territory includes a set of information regarding it which can be used to learn and to check your knowledge in entertaining way as well as a reference material. The game has different modes – you can find a place in the map given its name or picture or some symbol (armorial bearings for example), you can guess the distance between two places, guess the year of historical event. The place can be a point (town or community) or a two-dimensional object – river, lake or administrative unit.

Geographical game has two main sections – **Games**, where you can choose one of 6 game modes and **Guide** which contains information necessary for games and reference material on communities, tourist objects, sights and historical events. You can consider the Guide as encyclopedia, where the data about geographical object can be found easily and quickly.

The games *LATVIA* and *RIGA* included as fields in game *EARTH* have high degree of detailing. The games *WORLD* and *EUROPE* also contain plenty of information about countries of the world but they have few pictures. There are a few drafts of games about other territories (Sweden and some of regions of Latvia) with small amount of information.

You can obtain and verify your knowledge in Latvian geography an history using game *LATVIA*. The vast collection of photos (currently 2000) with short descriptions is added to he game. It contains information about most of the castles, manors, monuments, churches, rivers and lakes of Latvia.

Game EARTH includes satellite programs **Albums** and **Maps** and another game **Puzzle**.

Program Albums is used to browse and create collections of photos viewable on computer screen. Its purpose is to order photos by some criteria, to add illustrative texts (names and descriptions) and provide means to view them on the screen. It is necessary aid to game EARTH. It also can be used separately – to view photos included in the game and to make independent photo collections.

There is additional feature in program Albums – the tool which draws peculiar ornaments – the ANV figures invented by its author and creates gratings which can be used as decorative framing for the pictures shown by the program.

Program Maps is a modification of the program Albums for work with geographical maps. This program lets you work with pictures of maps in a similar way as the program Albums with photos. Game EARTH needs this program to prepare maps used in the game, to get coordinates for places and to create and modify two-dimensional objects (rivers, lakes, borders). The program can be used separately from game EARTH. You can use it to determine coordinates and distances when planning a touring route as well as to calculate area and mathematical centers for geographical territories.

CENTRISTICS

The game EARTH comprises original theory called centristics about the centers of geometrical figures and geographical areas.

It is often heard about attempts to find and mark centers of geographical territories, but usually the precise definition of the center is not given. In planar geometry the only known definition for the center of the figure that is not central-symmetrical is **center of gravity**. For non-planar figures the center of gravity is outside the figure and the question about the center is left without a clear answer.

In the process of making the game EARTH the centristics is created – the theory that defines and lets you compute geometrical centers for planar and spherical figures. There is no limit to such centers because the **power of center** p can be any floating-point number, for example, $p=2$ gives you center of gravity. Center with $p=1$ is interesting where distances to all points of territory are minimized. This is the point where one

should gather all the hay from the territory to minimize transportation costs. Despite the simple definition the ***haystack center*** is hard to calculate even for a non-regular triangle.

The interpretation of haystack is valid for other centers too if the costs of transporting the hay are considered proportional to the distance in power ***p***. All the centers form a continuous line – **centroid** with ends in the centers of inscribed and circumscribed circles (the centers with $p = -\infty$ and $p = \infty$).

The game EARTH includes a tool for calculating centers of geographical territories. The centroid of Latvia is obtained using this tool and is shown in Figure 3 with the haystack center expressly marked.

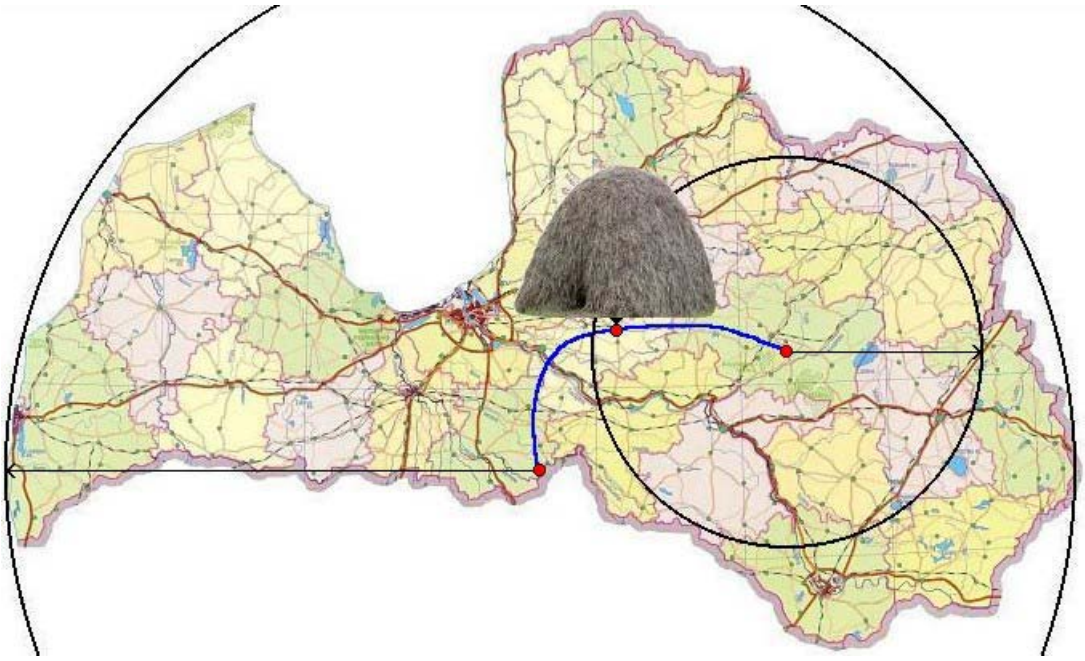

Figure 3. Centroid of Latvia

REFERENCES

Gerards Jonins and Janis Sedols. "Analysis of Overload in the Telecommunication Systems with Repeated Calls Caused by the Busy Subscribers". In *Proceedings of 42-nd Riga Technical University Conference*, Riga, Latvia, October 12, 2001. pp 49-50.

Janis Sedols and Madars Rikards. "SITA2000 – Research System of Models with Discrete Events for Education and Practical Purposes". In *Proceedings of the International Workshop on Harbour, Maritime and Multimodal Logistics Modelling & Simulation HMS 2003*, September 18-20, 2003, Riga, Latvia, pp 284 - 286

BIOGRAPHIES

Jānis Sedols graduated from the University of Latvia in 1961 as a mathematician and received a Dr. sc. comp. degree in 1993 at the same university. Leading researcher of the Research Institute of Mathematics and Computer Science, University of Latvia. His professional interests include research and practical implementation of systems with discrete events. Developed and implemented simulation and analytic modeling system SITA. Jānis Sedols has about 60 scientific publications. He is involved in The Latvian Education Informatization System (LIIS) project, most notable work is intellectual computer game Earth (about geography and history).

Sniedze Sedola graduated from the University of Latvia in 1989 specialized in applied mathematics. Since then she worked as a programmer, developer, system analyst and consultant for various software companies in Latvia, Germany, Finland and Sweden. Her professional interests lie in the field of most recent technologies of software development and reengineering.