SENSOR INFORMATION FUSION FOR THE NEEDS OF FAULT DIAGNOSIS IN MARINE DIESEL ENGINE PROPULSION PLANT

RADOVAN ANTONIĆ[1] , ZORAN VUKIĆ[2] , ANTE MUNITIĆ[1]

[1] *Split College of Maritime Studies, Univ. Split*
Zrinsko-Frankopanska 38, 21000 Split, Croatia
e-mail: antonic@pfst.hr
[2] *Faculty of Electrical Engineering and Computing, Univ. Zagreb*
Unska 8, 10000 Zagreb, Croatia

Abstract
Complex industrial processes like Marine Diesel Propulsion Plant (MDPP) have complex interrelations and interdependencies between variables and parameters. This characteristic could be used in estimating unknown or unmeasured variables from the information gathered by other measurements and sources using information fusion by means of a soft computing methods. In the paper, a structural analysis approach to identifying most relevant variable interrelations, components or subsystems of MDPP with inherent redundant information has been proposed. Sensor information fusion method was chosen to be using artificial neural networks (ANN). The paper presents proposed ANN with structure and learning algorithms. Simulation have been carried out in Matlab-Simulink environment with engine speed estimation example.

Keywords
Diesel engine propulsion plant, structural description, redundant information, sensor fusion, neural network

1. INTRODUCTION

Diagnostic and control systems of marine diesel propulsion plant require a large number of different sensors with different measuring types and locations at various critical points on the propulsion engine and its subsystems (temperatures, pressures, flow rates, levels, metal content of the lubricating oil, water content in the fuel oil and more). The data from sensors are collected and transmitted to the processing units.
The main purpose of most signal processing is to yield knowledge of a situation so that proper decisions can be done. Many of these signals should be combined in some way to enable decisions of such conditions as emergency states, when to change oil, time to repair or replace parts, engine efficiency etc.
In some specific situations human intuition, heuristic knowledge and experience have to be fused together with sensor data for good plant estimation (overall engine efficiency, degradation of oil condition, fault conditions,..). One effective approach in such case is information fusion that will be discussed in the paper.
In the cases when a sensor fails to operate or operates with faults, sensor information fusion methods are needed to reconstruct the lost signals - information.
Aiming to use sensor information fusion with existing sensors the need for exploring possible redundancies inherent to the system structure is evident. One suitable method is structural description or analysis of the system decomposing it into functional dependent end related components or subsystems. This approach for MDPP will be presented in the paper.
Sensor information fusion method was chosen to be using artificial neural networks which are very suitable in the case of on-line gathered data.
Simulation example will be given for marine diesel engine speed estimation using redundant relations and data.

Proceedings 17th European Simulation Multiconference
(c) SCS Europe BVBA, 2003 ISBN 3-936150-25-7

2. STRUCTURAL DESCRIPTION OF A SYSTEM: GENERAL APPROACH

One can consider a system S like union of its functional components $\bigcup_{i=1}^{n} C_i$, each of them establishing some relations or constraints f_i between a set of variables and parameters (known or unknown) z_j of the system, i.e. :

$$f_i(z_1, z_2, ..., z_p), \quad 1 < p \le m$$

where f_i can represent dynamic, static, linear or non linear relation, crisp or fuzzy rules, empirical or any other relation-constraint.

Structural model of the system can then be represented with a set of constraints: $F = \{f_1, f_2, ..., f_n\}$ and a set of variables and parameters $Z = \{z_1, z_2, ..., z_m\} = Z^K \cup Z^X$ to which constraints are valid. $Z^K = U \cup Y \cup C$ is a set of known variables and parameters, where U represents a set of control variables, Y is a set of measured outputs and C is a set of known constant parameters. Z^X is a set of unknown variables and parameters of the system.

Now, the structural model of the system can be represented by directed graph with nodes and connecting arcs $G(F, Z, A)$. The elements of a set of arcs in such graph $A \subset (FxZ)$ are defined with the following mapping scheme - binary relations:

$$\begin{aligned} A &: \; F \, x \, Z & \{0,1\} \\ A^K &: \; F \, x \, Z^K & \{0,1\} \\ A^X &: \; Z^X \, x \, F & \{0,1\} \end{aligned} \qquad (1)$$

For more details see (Izadi-Zamanabadi 1999).

3. STRUCTURAL ANALYSIS OF MARINE DIESEL PROPULSION PLANT – REDUNDANT DATA AND RELATIONS

A structural analysis model to identify most relevant variable interrelations, components or subsystems of MDPP with inherent redundant information which could be used in fusion process will be explored.

3.1 Structural description of MDPP

The main purpose of the structural description of MDPP here is to explore some inherent redundant relations which can be used in calculating unknown or unmeasured variables using sensor information fusion method.

Figure 1 shows the structure of MDPP with its main structural components: C_1 - diesel engine dynamics, C_3 - engine shaft dynamics, C_5 and C_6 - propeller shaft dynamics, C_8 - ship speed dynamics, C_{10} - hull dynamics, and corresponding sensors: fuel index sensor C_2, engine speed sensor C_4, pitch propeller sensor C_7 an ship speed sensor C_9.

Relations and constraints between variables and parameters can be obtained in various ways: by mathematical modelling, by simulation, using experimental data, eliciting expert's and operator's knowledge, etc. For details see (Antonić and Radica 1991; Antonić et al. 2000; Antonić and Vukić 2002; Vukić et al. 1998; Izadi-Zamanabadi 1999).

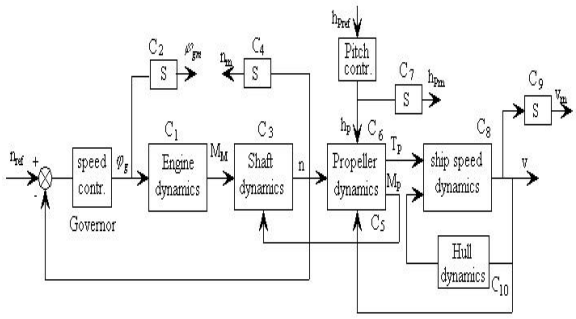

Figure 1: The structural diagram of diesel propulsion plant

where: n_{ref} - engine reference speed (set value); n - engine speed; φ_g - fuel link position; h_{Pref} - propeller pitch set value; h_P - propeller pitch; v - ship speed; K_M, T_M - engine gain and time constant; M_P, T_P - propeller torque and thrust;
v_a - advance propeller speed; R_u - total hull resistance

The structure of MDPP in Figure 1 can be represented as union of its components : $\bigcup_{i=1}^{10} C_i$.

A set of constraints / structural relations is:

$$F = \{f_1, f_2, ..., f_{10}\} \qquad (2)$$

A set of known measurable variables and parameters is: $Z^K = \{\varphi_{gm}, n_m, h_{Pm}, v_m, K_M\}$ (3)

A set of unknown variables and parameters is:

$$Z^X = \{\varphi_g, n, h_P, v, M_M, M_P, T_P, R_u\} \qquad (4)$$

The measuring noise is here neglected so:

$$n_m = n \,;\, \varphi_{gm} = \varphi_g \,;\, h_{Pm} = h_P \,;\, v_m = v \,. \qquad (5)$$

Adequate structure graph of the MDPP with variable and parameter relations is shown in figure 2.

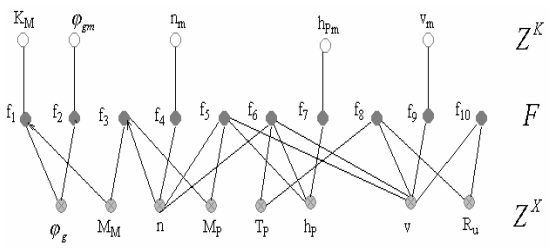

Figure 2: Structure graph of MDPP system with variable and parameter relations

3.2 Redundant relations and information fusion

From the structural graph of MDPP system one can get analytical redundant relations between variables and parameters: direct relations and indirect or derived ones (with sensor information fusion and some reasoning method). For direct relations structural constraints are applied only to known - measured variables i.e. to subset Z^K, while derived relations are those to which structural constraints of unknown - unmeasured variables are applied, i.e. to subset Z^X.
Indeed, derived redundant relations are more interesting, because they result with analytical redundancy what is a key point for information fusion. These are frequently based on the human expert knowledge and operator experience.
It is evident from the structure graph model of MDPP, that there are redundant relations and information which can be used in case of faulty sensors.
For instance, in the case of engine speed sensor fault (component C_2 in structural diagram) the value of the engine speed could be estimated i.e. calculated using information fusion from other sources (C_5 and C_6).
Unknown variable can be estimated by integrating several other measurements into a single robust estimator (software sensor). The fusion of data from different sensors will add new valuable information that would be otherwise unavailable. The need of data fusion arises also from the fact the information gathered is often incomplete, uncertain, imprecise or may be from a faulty sensor. There are several possible methods for data fusion and the very effective one is artificial neural network approach.

4. INFORMATION FUSION IN MDPP USING ANN APPROACH – SIMULATION EXAMPLE

The ability of ANN to learn from experience i.e. from history of data during on-line operation is making them the preferred choice for process modelling with intrinsic variable and parameter interrelations. In the above structural description of MDPP the redundant relations between variables and parameters were illustrated . Some of them will be used in the information fusion example.

4.1 Engine speed estimation using information fusion: Speed sensor faulty - simulation example

Engine diagnosis and control system needs speed information during normal operation and gets it continually from speed sensor.
In the case of speed sensor failure it would be desirable to have a system that could estimate engine speed (most critical variable in closed loop speed control) from various sets of inputs i.e. information sources giving redundancy in speed information and thus leading to more robust control system. That is especially important if a11 speed sensors (usually two) are in faulty conditions.
The required engine speed value could be estimated on-line from other variables which are related to it (see Figure 2) : propeller torque M_P or propeller thrust T_P, ship speed v, propeller pitch h_p if the propeller is controllable (CPP).
Figure 3 a and b illustrate engine speed estimation from other known variables - signals measured on-line (M_P, T_P, v).

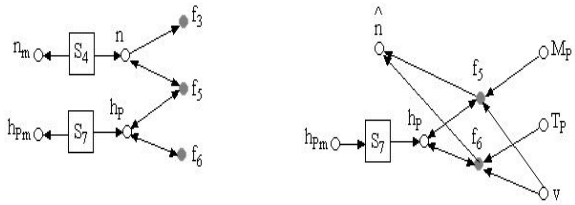

a) b)

Figure 3: Engine speed estimation using information fusion

4.2 Neural network structure and learning algorithms

In the engine speed estimation example three independent input signals to the ANN and one output signal which should be the best estimate of engine speed in case of faulty sensor were used.
The data from different sources are usually pre-processed (data normalization, filtering, principal component analysis, etc.) before applied to the ANN for fusion purpose.
The ANN, in this experiment, was organized in two processing stages i.e. two ANN were designed and used (Figure 4).
The first stage consists of estimation ANN and is for feature extraction from input signals. The second stage consists of ANN for information fusing i.e. decision making and selecting the best estimate from the first ANN.

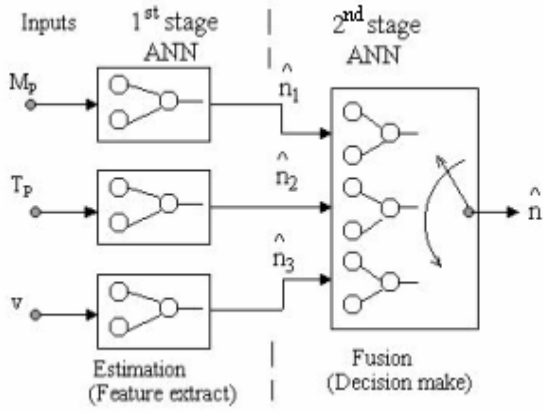

Figure 4: Concept of ANN for engine speed fusion

The first stage consists of three identical feed forward NN (in Figure 5a shown only one for input

variable Mp) each with one hidden layer with log-sigmoid transfer function and one output layer with linear transfer function. The second stage consists of self-organising NN with one competitive layer with three inputs (these are outputs from the first stage) and one output ADALINE stage (in figure 5 b). There are three neurones in competitive layer and only one is a winner in a time. Euclidean distance measure (see Antonić and Vukić 2002) in decision making i.e. choosing the best estimate in each time step was used. In the estimation stage of NN, 3 inputs are fed (propeller torque Mp, propeller thrust Tp and ship speed v) to estimate engine speed n.

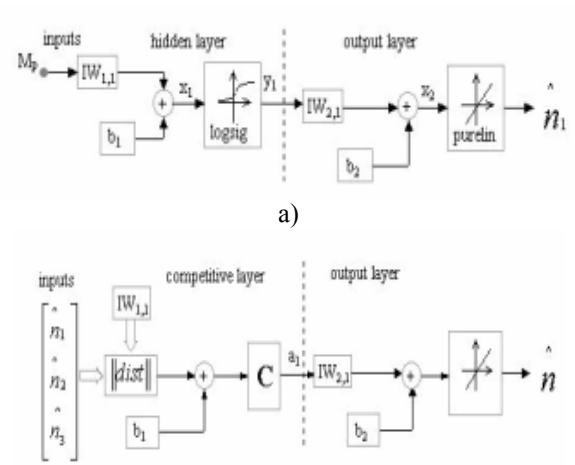

Figure 5: Structure of ANN for engine speed estimation

The mse (the mean squared error between the target i.e expected values and the network outputs – estimated values) performance function is chosen as a criterion.

$$mse = \frac{1}{N}\sum_{k=1}^{N}(n(k) - \hat{n}(k))^2 \qquad (6)$$

Performance goal was set to mse = 0.01 rads^{-1}.

In minimising performance function the gradient descent back-propagation learning algorithm for updating network weights and biases with adaptive learning rate was used.

$$x(k+1) = x(k) - \alpha(k)g(k) \qquad (7)$$

where $x(k)$ is a vector of current weights and biases, $g(k)$ is the current gradient and $\alpha(k)$ is the learning rate.

For comparison purpose we used two learning algorithms:

- Quasi-Newton (BFGS) learning algorithm,

$$x(k+1) = x(k) - H^{-1}(k)g(k) \qquad (8)$$

$H(k)$ is the Hessian matrix (second derivatives) of performance function at the current values of the weights and biases.

- Levenberg-Marquardt learning algorithm

$$x(k+1) = x(k) - \left[J^T J + \mu I\right]^{-1} J^T e \qquad (9)$$

where J is the Jacobian matrix which contains first derivatives of the network errors with respect to the weights and biases, e is a vector of network errors, μ is a scalar.

4.3 Simulation results in engine speed estimation

The training set used for the proposed ANN is obtained from the real diesel engine propulsion plant simulator PPS2000 (Norcontrol) with propulsion diesel engine MAN B&W type 5L90MC with maximum power of 18.000 kW installed on the very large crude carrier, (fully loaded). We've got training set values with diesel engine working in four basic operating regimes – modes (table 1): Full ahead (with engine power of 100 %) , Half (engine power of 75 %), Slow (engine power of 50 %) and Dead slow (engine power of 25 %).

Table 1: Simulated engine data for training ANN

Engine regime	Engine power (%)	Engine speed - n (rad/s)	Mp (Nm) x10^6	Tp (N) x10^6	Ship speed v (m/s)
Full Ahead	100	7.74	2.20	1.46	7.71
Half	75	7.02	1.90	1.21	7.06
Slow	50	5.14	1.05	0.66	5.11
Dead slow	25	3.10	0.41	0.26	3.10

The second part of the simulation was carried out by using Matlab/Simulink environment.

After training the ANN given in Figure 5 using training data set from table 1, we've got very good results for engine speed estimates in four operating points (Full Ahead, Half, Slow, Dead slow) . These are presented in table 2 and Figure 6. The differences between speed estimates are very small (with mse: 3.3*10^{-3} with Mp data, 9.98*10^{-4} with Tp and 6.16*10^{-4} with v data set.

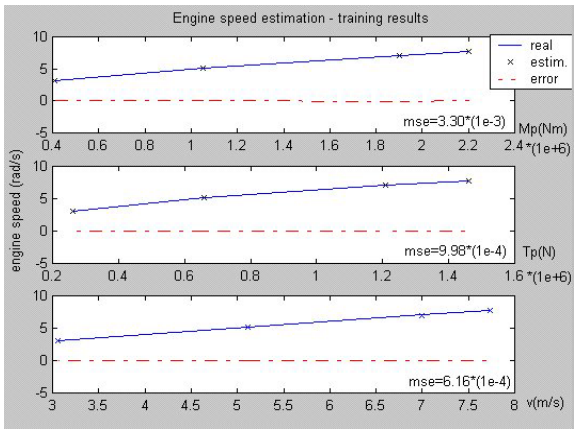

Figure 6: Engine speed estimation with training data set from Mp, Tp, v

Table 2: Estimated engine speed n from Mp, Tp, v

Engine speed (target) n (rad/s)	Estimated speed from other signals (with training data)		
	Mp	Tp	v
7.740	7.682	7.712	7.692
7.020	7.114	7.065	7.073
5.140	5.097	5.114	5.124
3.100	3.114	3.113	3.118

Comparing results obtained during training session of NN with two different learning algorithms: Levenberg-Marquardt (LM) and Quasi-Newton we've noticed very little difference (table 3).
Nevertheless, we prefer LM learning algorithm because the estimation error (mse) and training period (epochs) were a bit lesser.

Table 3: Comparison results of two learning algorithms in training NN

	Levenberg-Marquardt			Quasi-Newton		
	Mp	Tp	v	Mp	Tp	v
mse	3.30 $*10^{-3}$	9.98 $*10^{-4}$	6.16 $*10^{-4}$	3.30 $*10^{-3}$	9.79 $*10^{-4}$	9.61 $*10^{-4}$
epoch	>500	115	26	>500	118	35

Performance goal (mse = 0.01) for the best engine speed estimate (with Tp data set) was reached in very shot time (4.17 s) i.e. after only 115 epochs of training.
Applying testing data set to ANN concurrently for three inputs: Mp, Tp and v, less accurate results were obtained (Figure 7) but nevertheless useful for practical use, except those estimated from ship speed data where the mean squared error was 11.55 %. The best results were obtained from propeller thrust measurement Tp (mse = 1.73 %).
The largest discrepancy between training and testing results were obtained for ship speed signal, maybe because of small training set.

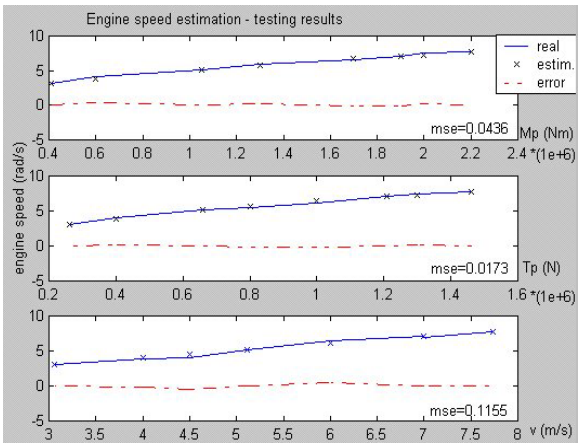

Figure 7: Engine speed estimation with testing data set from Mp, Tp, v.

In each time step, the designed ANN chooses the best estimate on its output so the final results were acceptable. Testing example with engine power of 100 % and expected real value of n = 7.74 rad/s: the best speed estimate, was with Tp data: n_e = 7.712 rad/s (see Figure 8a). We also tested ANN output in the case of lost one or even two of three input signals and have got good engine speed estimate. Figure 8b illustrates situation with two input signals missed (sensor faults). The ANN output was n_e = 7.785 rad/s (Figure 8b).

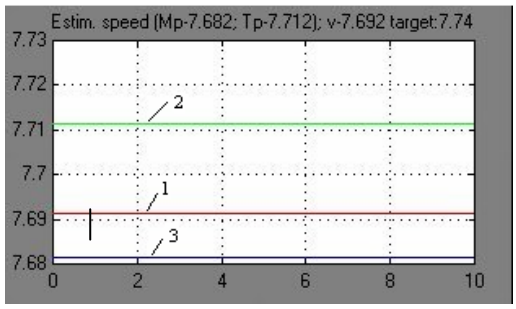

a)

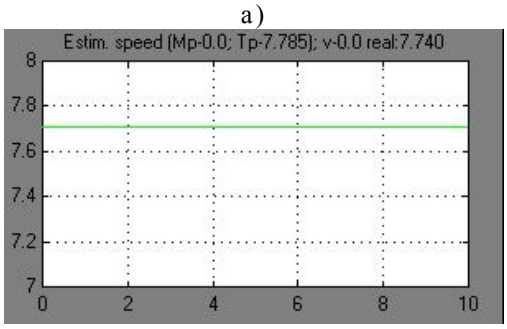

b)

Figure 8: Engine speed estimate (best ANN output)

Applying testing data within all operating regions is illustrated in Figure 9. Test results for engine speed estimate are fairly good for Mp and Tp.

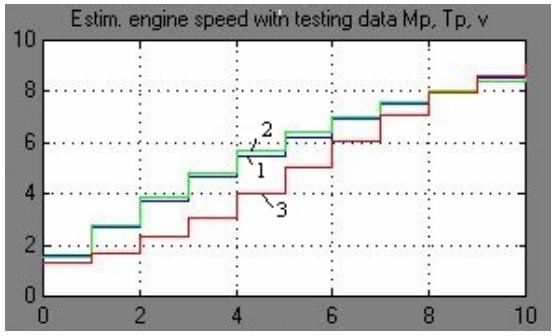

Figure 9: Estimating engine speed with testing data Mp, Tp, v within the operating region

Data fusion of three signals with expert modification of contribution coefficients on engine speed with K_{Mp} = 0.34, K_{Tp}=0.36, K_v=0.30 had given quite good estimate (see Figure 10).

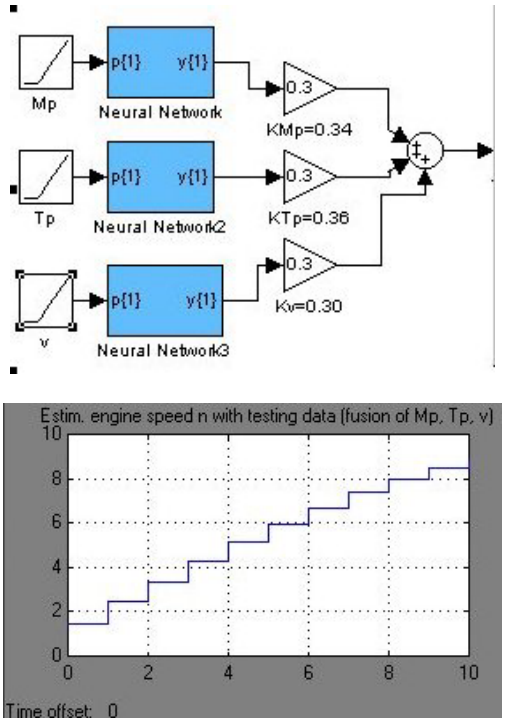

Figure 10: Estimating engine speed with data fusion of Mp, Tp, v

Finally, three testing cases with M_P as input signal to the ANN has been studied in parallel and the output (speed estimate) was recorded in the diagram (see Figure 11):

The first case was with M_P as only input signal. Input signal in the second case was M_P with the added noise (zero mean Gaussian with variance of 0.02). In the third case, the disturbance signal (sine wave of amplitude of 0.1 and frequency of 1 rad/s) was added to M_P . We could conclude that proposed fusion scheme is rather robust to noise and disturbance in input signals.

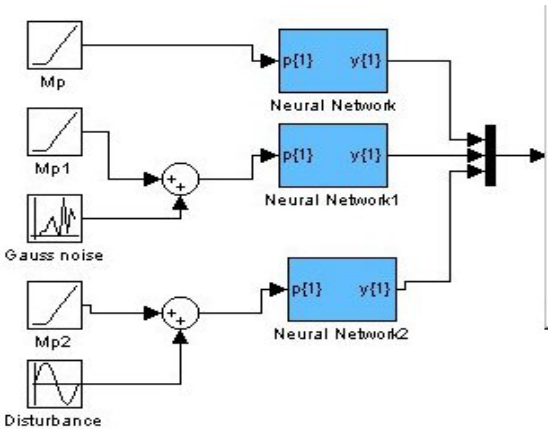

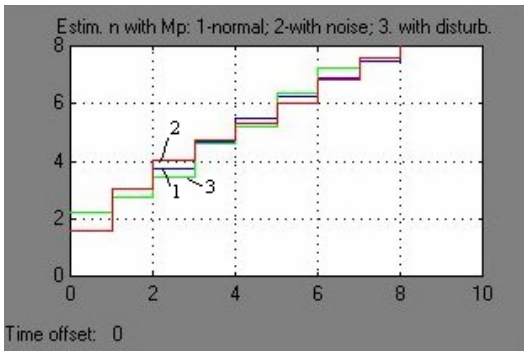

Figure 11: Estimating engine speed with Mp: 1 – normal ; 2-with Gauss noise; 3-with sine disturbance

CONCLUSION

Sensor information fusion concept is becoming more and more attractive especially in the area of diagnostics and control systems. Some important advantages of using information fusion in combination with soft computing technologies like artificial neural networks, fuzzy logic, genetic programming could give more robustness, reliability, fault tolerance and intelligence to control systems.

The structural approach is presented and applied to the marine diesel engine propulsion plant as an effective method to identify the subsystems with inherent redundant information. Based on that analysis we proposed ANN for information fusion process which consists of two stages: The first stage is an estimation ANN for feature extraction from input signals and the second stage is for information fusing i.e. decision making and selecting the best estimate from the first stage ANN. We tested it with the simulation example. Diesel engine speed was estimated on the basis of three other signals: propeller torque M_P, propeller thrust T_P and ship speed v. It was shown that good speed estimation could be obtained using other available information in the case of faulty speed sensor. Only a part of the obtained results was presented in the paper.

The proposed fusion scheme was also tested with noise and disturbance signals added to the M_P input signal and concluded fairly good scheme robustness.

Better results would probably be obtained if larger sets of training and testing data were used. The generalisation scheme in the sensor information fusion within MDPP will be of our interest in the near future.

REFERENCES

Antonić, R. and G. Radica. 1991. "Diesel Engine Diagnostic Simulation Model based on Trend Curves", Proceedings of 33'rd Symposium ETAN in Marine, Zadar, 29-31.

Antonić, R., Z. Vukić, and I. Kuzmanić. 2000. "Basic Principles and Techniques of Expert Knowledge Elicitation for the Needs of Technical Systems Diagnostics", Brodogradnja 48,4, 330-337.

Antonić, R and Z. Vukić. 2002. "Knowledge Representation in Diagnosis and Control of Marine Diesel Engine", Brodogradnja 50,1, 57-66.

Izadi-Zamanabadi, R. 1999. Fault Tolerant Supervisory Control - System Analysis and Logic Design, PhD Thesis, Department of Control Eng. , Aalborg Univ. , Denmark.

Samarasooriya, V.N.S. and P.K. Varshney. 2000. "A fuzzy modelling approach to decision fusion under uncertainty", Fuzzy sets and systems 114, 59-69.

Vukić, Z. H. Ožbolt and M. Blanke. 1998. "Analitical Model-based Fault Detection and Isolation in Control Systems", Brodogradnja 46, 3, 253-263

Zilouchian, A. and Mo. Jamshidi. 2001. Intelligent Control Systems Using Soft Computing Methodologies. CRC Press, 2001

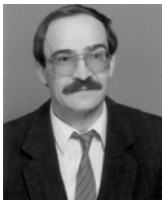

Radovan Antonić received his B.Sc. degree in electrical engineering from University of Split in 1980, and M.Sc. and Ph.D. degree in electrical engineering from University of Zagreb in 1986 and 2002. respectively. He is IEEE member and research interest include control systems, fault tolerant control, expert systems, specially in marine applications.

Author or co-author of about 40 bibliographical units (scientific and professional conference and journal papers, research projects, text books, etc.). Currently, he is a senior lecturer at Split College of Maritime Studies.

Zoran Vukić received his B.Sc, M.Sc. and Ph.D. in electrical engineering from University of Zagreb in 1972, 1977 and 1989 respectively. He is professor at the University of Zagreb, Department of Control and Computer Engineering in Automation. His research interest is in fault tolerant control, adaptive & robust control, nonlinear control, guidance and control of marine vehicles.

He is member of IEEE Control Sys. Soc., IEEE Oceanic Eng. Soc. and IFAC Technical Committees on Marine systems and Adaptive and learning control. Author or co-author of more than 100 bibliographical units (conference and journal papers, research projects, referee reports, textbooks etc.).

Ante Munitić received his first B.Sc. in Electric and Energetic Engineering in 1968, and his second in 1974, his M.Sc. degree Organisation System and Cybernetics Science (Operational Research) in 1978, and his Ph.D. of Organisation Science (System Dynamics), in 1983. He is currently a full Professor of Computer and Informatics Science at the University of Split.

He has published over 100 papers on system dynamics modelling and simulation, operational research, marine automatic control system and The Theory of Chaos. He has published two books: "Computer Simulation with help of System Dynamics" and "Basic Electric Energetic and Electronics Engineering".